TX-28XD70C Service Manual

Service Support

Service and repair of this product is supported by Panasonic's LUCI interface.

This interface provides a link between the TV and a standard PC to allow a number of diagnostic and control functions to be performed.

For more details contact your local Panasonic company.

BACK

EXIT

Video / Audio

Control

BACK

B2 - PCB

D - PCB

E - PCB

F - PCB

H - PCB

Y - PCB

BACK

B2 - Schematic

D - Schematic

E - Schematic

F - Schematic

H - Schematic

M3 - Schematic

Y - Schematic

BACK

SM – 97045

Service Manual

Colour Television

TX–28XD70C

EURO–3H Chassis

SPECIFICATIONS

Power Source : 220–240V AC, 50Hz
Power Consumption : 150W
Standby Power Consumption : 1W
Aerial Impedance : 75Ω unbalanced, Coaxial Type
Receiving System : PAL–I, B, G, D, K, H, PAL 60, SECAM B, G, D, K, L/L' MNTSC, NTSC (AV Only)

Receiving Channels :
VHF E2 – E12
VHF A – H (ITALY)
VHF R3 – R5
UHF E21 – E69
CATV S1 – S10 (M1 – M10)
CATV S21 – S41 (HYPERBAND)
VHF H1 – H2 (ITALY)
VHF R1 – R2
VHF R6 – R12
CATV (S01 – S05)
CATV S11 – S20 (U1 – U10)

Intermediate Frequency :
Video: 38.9 MHz, 34MHz
Sound: 32.9MHz, 33.4 MHz, 33.16 MHz, 32.4 MHz, 40.4MHz
Colour: 34.47 MHz, 34.5 MHz, 34.65 MHz

Video / Audio Terminals :

AUDIO MONITOR OUT	Audio(RCA x 2)	500mV rms,1kΩ
AV1 IN	Video (21 pin)	1V p–p 75Ω
	Audio (21 pin)	500mV rms 10kΩ
	RGB (21 pin)	
AV1 OUT	Video (21 pin)	1V p–p 75Ω
	Audio (21 pin)	500mV rms 1kΩ
AV2 IN	Video (21 pin)	1V p–p 75Ω
	Audio (21 pin)	500mV rms 10kΩ
	S–Video IN (21 pin)	Y : 1V p–p 75Ω
		C : 0.3V p–p 75Ω
AV2 OUT	Video (21 pin)	1V p–p 75Ω
	Audio (21 pin)	500mV rms 1kΩ
AV3 IN	Audio (RCA x 2)	500mV rms,10kΩ
	Video (RCA x 1)	1V p–p 75Ω

High Voltage : 28.5kV ± 1kV (zero beam current)
Picture Tube : A66ECF61X71 66 cm
Audio Output :
Speaker: 2 x 20W (Music Power), 8 Ω Impedance
Headphones: 8 Ω Impedance
Accessories supplied : Video Stand, Remote Control, 2 x R6 (UM3) Batteries

Dimensions :
Height : 596.5 mm
Width : 778 mm
Depth : 481.5 mm
Net Weight : 35kg

Specifications are subject to change without notice.
Weight and dimensions shown are approximate.

TECHNISCHE DATEN

Netzpannung : 220–240V AC, 50Hz
Leistungsaufnahme : 150W
Standby Leistungsaufnahme : 1W
Antennenimpedanz : 75Ω asymmetrisch, Koaxial – Typ
Empfangssystem : PAL–I, B, G, D, K, H, PAL 60, SECAM B, G, D, K, L/L' MNTSC, NTSC (nur AV Eingang)

Empfangsbereiche :
VHF E2 – E12
VHF A – H (ITALY)
VHF R3 – R5
UHF E21 – E69
CATV S1 – S10 (M1 – M10)
CATV S21 – S41 (HYPERBAND)
VHF H1 – H2 (ITALY)
VHF R1 – R2
VHF R6 – R12
CATV (S01 – S05)
CATV S11 – S20 (U1 – U10)

Zwischenfrequenz :
Video: 38.9 MHz, 34MHz
Sound: 32.9MHz, 33.4 MHz, 33.16 MHz, 32.4 MHz, 40.4MHz
Colour: 34.47 MHz, 34.5 MHz, 34.65 MHz

Video / Audio Anschlüsse :

AUDIO MONITOR OUT	Audio(RCA x 2)	500mV rms,1kΩ
AV1 EINGANG	Video (21 pin)	1V p–p 75Ω
	Audio (21 pin)	500mV rms 10kΩ
	RGB (21 pin)	
AV1 AUSGANG	Video (21 pin)	1V p–p 75Ω
	Audio (21 pin)	500mV rms 1kΩ
AV2 EINGANG	Video (21 pin)	1V p–p 75Ω
	Audio (21 pin)	500mV rms 10kΩ
	S–Video IN (21 pin)	Y : 1V p–p 75Ω
		C : 0.3V p–p 75Ω
AV2 AUSGANG	Video (21 pin)	1V p–p 75Ω
	Audio (21 pin)	500mV rms 1kΩ
AV3 EINGANG	Audio (RCA x 2)	500mV rms,10kΩ
	Video (RCA x 1)	1V p–p 75Ω

Hochspannung : 28.5kV ± 1kV (bei Nullstrahlstom)
Bildrohre : A66ECF61X71 66 cm
Ton Ausgangsleistung : 2 x 20W (Musikleistung)
Lautsprecher 8 Ω Impedanz
Kopfhörer: 8 Ω Impedanz
Mitgel. Zubehör : Video Stand, Fernbedienung, 2 x R6 (UM3) Batterien

Abmessungen :
Höhe : 596.5 mm
Breite : 778 mm
Tiefe : 481.5 mm
Gewicht : 35kg

Änderungen der technischen Daten vorbehalten.
Gewichte und Abmessungen sind Näherungsangaben.

Panasonic

CONTENTS

INHALT

SAFETY PRECAUTIONS

GENERAL GUIDE LINES

1. It is advisable to insert an isolation transformer in the AC supply before servicing a hot chassis.

2. When servicing, observe the original lead dress in the high voltage circuits. If a short circuit is found, replace all parts which have been overheated or damaged by the short circuit.

3. After servicing, see that all the protective devices such as insulation barriers, insulation papers, shields and isolation R–C combinations are correctly installed.

4. When the receiver is not being used for a long period of time, unplug the power cord from the AC outlet.

5. Potentials as high as 29.5kV are present when this receiver is in operation. Operation of the receiver without the rear cover involves the danger of a shock hazard from the receiver power supply. Servicing should not be attempted by anyone who is not familiar with the precautions necessary when working on high voltage equipment. Always discharge the anode of the picture tube to the chassis before handling the tube.

6. After servicing make the following leakage current checks to prevent the customer from being exposed to shock hazards.

LEAKAGE CURRENT COLD CHECK

1. Unplug the AC cord and connect a jumper between the two prongs of the plug.

2. Turn on the receiver's power switch.

3. Measure the resistance value with an ohmmeter, between the jumpered AC plug and each exposed metallic cabinet part on the receiver, such as screw heads, aerials, connectors, control shafts etc. When the exposed metallic part has a return path to the chassis the reading should be between 4M ohm and 20M ohm. When the exposed metal does not have a return path to the chassis the reading must be infinite.

SICHERHEITSVORKEHRUNGEN

ALLGEMEINE RICHTLINIEN

1. Es ist empfehlenswert einen Trenntransformator in die Stromversorgung zu schalten, bevor Reparaturen an einem Gerät vorgenommen werden, dessen Chassis unter Spannung steht.
2. Bei der Durchführung von Servicearbeiten dürfen die ursprünglichen Kabelanschlüsse nicht vertauscht werden. Dies gilt insbesondere für die Anschlüsse im Hochspannungsteil. Hat sich ein Kurzschluß ereignet, dann sind alle Teile, an denen Spuren von Überhitzung sichtbar sind, auszuwechseln.
3. Nach Beenden der Servicearbeiten ist sicherzustellen, daß alle Sicherheitsvorrichtungen, wie Isolationsstege, Isolationspapiere, Abschirmungen und Isolations R–C Glieder wieder richtig eingesetzt sind.
4. Wenn der Fernseher während längerer Zeit nicht in Betrieb gesetzt wird, sollte der Netzstecker aus der Netzsteckdose gezogen werden.
5. Im Betrieb sind Spannungen bis zu 29.5kV in diesem Gerät vorhanden. Die Inbetriebnahme des Fernsehers ohne aufgesetzte Rückwand bringt die Gefahr eines elektrischen Schlages von der Fernseher – Stromversorgung mit sich. Servicearbeiten solten daher auch nie durch Personen versucht werden, die nicht in vollem. Umfang mit den Sicherheitsvorkehrungen beim Umgang mit Hochspannungsgeräten vertraut sind. Vor der Handhabung mit der Bildröhre ist die Anode der Bildrohre immer an dem Empfängerchassis zu entladen.
6. Nach Beenden der Servicearbeiten sind die folgenden Kriechstrom–Prüfungen durchzuführen, um den Kunden vor der Gefahr eines elektrischen Schlages zu schützen.

MESSUNG DES ISOLATIONSWIDERSTANDES IM ABGESCHALTETEN ZUSTAND

1. Den Netsztecker aus der Netzsteckdose ziehen und die beiden Steckerstifte kurzschließen.
2. Den Geräteschalter des Fernsehgerätes einschalten.
3. Mit einem Ohmmeter den Widerstandswert zwischen dem überbrückten Netzkabelsteckerund jendem zugänglichen Metallteil am Gehäuse des Fernsehgerätes, wie Schraubenköpfe, Antennen, Achsen der Regler, Griffassungen usw.messen. Wenn ein zugängliches Metallteil keine Rückleitung zum Chassis hat, Muß die Anzeige unendlich betrgen.

LEAKAGE CURRENT HOT CHECK

1. Plug the AC cord directly into the AC outlet. Do not use an isolation transformer for this check.
2. Connect a 2kΩ 10W resistor in series with an exposed metallic part on the receiver and an earth such as a water pipe.
3. Use an AC voltmeter with high impedance to measure the potential across the resistor.
4. Check each exposed Metallic part and check the voltage at each point.
5. Reverse the AC plug at the outlet and repeat each of the above measurements.
6. The potential at any point should not exceed 1.4 Vrms. In case a measurement is outside the limits specified, there is a possibility of a shock hazard, and the receiver should be repaired and rechecked before it is returned to the customer.

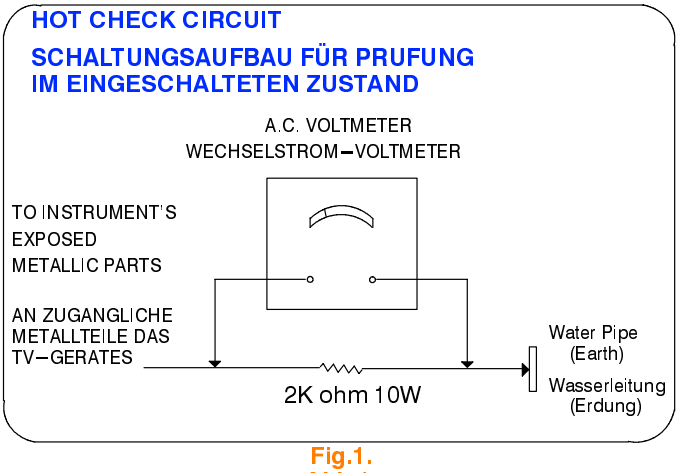

Fig.1.
Abb.1.

X–RADIATION WARNING

1. The potential sources of X–Radiation in TV sets are the high voltage section and the picture tube.
2. When using a picture tube test jig for service ensure that the jig is capable of handling 29.5kV without causing X–Radiation.

NOTE : It is important to use an accurate periodically calibrated high voltage meter

1. Set the brightness to minimum.
2. Measure the high voltage. The meter should indicate 28.5kV ± 1kV if the meter indication is out of tolerance, immediate service and correction is required to prevent the possibility of premature component failure.
3. To prevent any X–Radiation possibility, it is essential to use the specified tube.

MESSUNG DES KRIECHSTROMS IM EINGESCHALTETEN ZUSTAND

1. Den Netzstecker direkt in eine Netsteckdose stecken. Für diese Messung keinen Trenntransformator verwenden.
2. Einen 2k Ω / 10W–Widerstand in Serie mit einem von außen zugänglichen Metallteil am Fernsehgerät und einer guten, Erdung z.B Wasserleitung, anschließen.
3. Ein Wechselstrom–Voltmeter mit einem Meßbereich von 1000 Ohm.Volt oder größer verwenden, um die Spannung über den Widerstand zu messen.
4. Jedes zugängliche Metallteil prüfen, und an jedem Punkt dies Spannung messen.
5. Den Netztecker umgekehrt in die Steckdose stecken und jede der obigen Messungen wiederholen.
6. Die Spannung darf an keinem der Punkte 1.4V eff. überschreiten. Wird dieser Wert nicht eingehalten, besteht die Gefar eines elektrischen Schlages, und das Fernsehgerät sollte daher repariert und nachgeprüft werden, bevor es an den Kunden zurückgegeben wird.

RÖNTGENSTRAHLUNG ACHTUNG :

1. Potentielle Quellen von Röntgenstrahlung in Fernsehgeräten sind das Hochspannungsteil und die Bildröhre.
2. Bei Verwendung eines Bildröhren–Prüfgerätes für den Service ist sicherzustellen, daß es für die Belastung von 29.5kV geeignet ist, ohne daß eine Röntgenstrahlung verursacht wird.

ANMERKUNG : Es ist wichtig, daß ein präzises, regelmäßig geprüftes Voltmeter verwendet wird.

1. Helligkeit auf Minimum stellen.
2. Die Hochspannung messen. Die Anzeige des Instrumentes sollte 28.5kV ± 1kV Falls die Anziege diese Toleranzgrenzen überschreitet, ist die sofortige Behebung nötig, um die Möglichkeit vorzeitigen Komponentenausfalls zu verhüten.
3. Um die Möglichkeit von Röntgenstrahlung zu begrenzen, ist es wichtig, daß nur die vorgeschriebene Bildröhre verwendet wird.

SERVICE HINTS

HOW TO REMOVE THE REAR COVER

1. Remove the 9 screws (A) as shown in Fig.2/Fig.3.

SERVICE HINWEISE

ENTFERNEN DER GERÄTERÜCKWAND

1. Die 9 Schrauben (A) entfernen, siehe Abb.2/Abb.3.

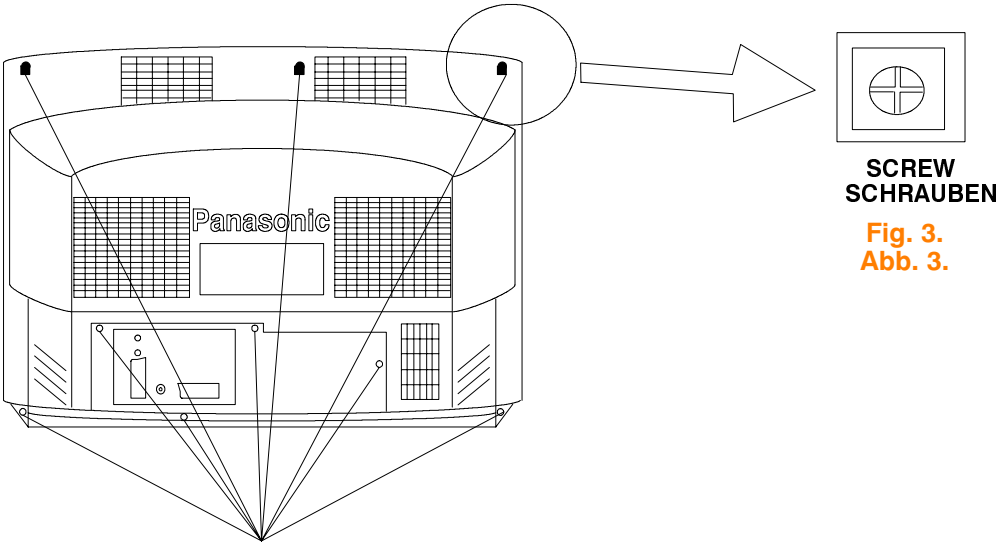

Fig. 3.
Abb. 3.

SCREWS A
SCHRAUBEN A

Fig. 2.
Abb. 2.

LOCATION OF CONTROLS

LAGE DER EINSTELLREGLER

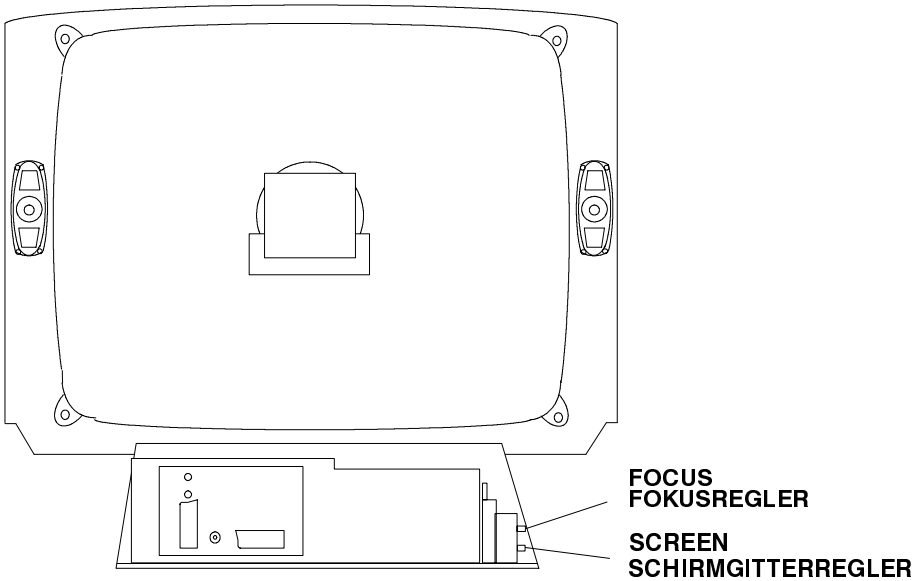

E P.C.B.

Fig. 4.
Abb. 4.

SERVICE MODE

The remote control is used for entering and storing adjustments, with the exception of cut–off adjustments which must always be done prior to service adjustment. Perform adjustments in accordance with screen display. The display on the screen also specifies the CCU variants as well as the approx. setting values. The adjustment sequence for the service mode is indicated below.

1. Set the Bass to maximum position, set the Treble to minimum position, press the Reveal button on the remote control and at the same time press the Volume down on the customer controls at the front of the TV, this will place the TV into the Service Mode.
2. Press the RED / GREEN buttons to step down / up through the functions.
3. Press the YELLOW / BLUE buttons to alter the function values.
4. Press the STORE button on the preset panel after each adjustment has been made to store the required values.
5. To exit the Service Mode press the Normalisation button.

NOTE: This TV also has the option of using a Memory Pack which enables you to copy the preset TV channels and analogue levels into the Memory Pack and then upload them onto another EURO–3H TV set.

USING THE MEMORY PACK

TV to Memory Pack process

1. Plug the memory pack into the lower of the two 21 pin terminals at the back of the TV and switch the TV on. If the TV has only one 21 pin connector then this will be able to accept the memory pack.
2. Go into the Service Mode as explained above. The screen will show:–

   Program
   External>>TV

3. Press the blue button on the remote control. The screen will show:–

   Program
   TV>>External

4. Press the STORE button on the TV. The screen will show:–

   Storing

5. All the tuning information stored inside the TV will now be transferred to the Memory Pack. This process will take 2–3 minutes to complete and when finished the screen will show:–

   OK!

Memory Pack to TV Process

1. Plug the memory pack into the lower of the two 21 pin terminals at the back of the TV and switch the TV on. If the TV has only one 21 pin connector then this will be able to accept the memory pack.
2. Go into the Service Mode as explained above. The screen will show:–

   Program
   External>>TV

3. Press the STORE button on the TV. The screen will show:–

   Loading

4. All the tuning information stored inside the Memory Pack will now be transferred to the TV. This process will take 2–3 minutes to complete and when finished the screen will show:–

   OK!

5. The tuning information from the Memory Pack has now been copied into the TV
6. To exit from the Service Mode switch off the TV.
7. The process has now been completed and the Memory Pack can now be removed.

Errors

If an error occurs while using the Memory Pack the TV will detect this and the screen will show:–

Program
Error!

If this happens then switch off the TV and repeat the process that was being used. If the errors continue to occur then check the connectors between the TV and the memory pack and check the 9V battery inside the memory pack.

ABGLEICHVERFAHREN

Die Fernbedienung dient zum Eingeben und Abspeichern der Einstellwerte, mit Ausnahme der Sperrpunkteinstellung, die grundsätzlich vor den hier beschriebenen Einstellungen vorgenommen werden muss. Die Einstellung erfolgt entsprechend dem Bildschirm–Display. Auf dem Bildschirm–Display erscheinen auch die CCU–Varianten sowie die ungefähren Einstellwerte. Die Einstellfolge für den Service–Modus ist nachstehend beschrieben.

1. Um in den Service–Mode zu gelangen, gehen sie bitte wie folgt vor.
   a) Stellen sie im Toneinstellungs–Menü die Bässe auf Maximum und die Höhen auf Minimum.
   b) Halten sie die REVEAL–Taste auf der Fernbedienung gedrückt und drücken zusätzlich die Taste –/v im Bedienteil des TV–Gerätes. Auf dem Bildschirm erscheint die entsprechende Anzeige für den Service–Mode.
2. Die einzelnen Funktionen mit Hilfe der ROTEN und GRÜNEN Taste anwählen.
3. Mit der GELBEN und BLAUEN Taste die Werte der einzelnen Funktionen ändern.
4. Nach jeder Einstellung die Taste STR auf der Fernbdienung oder am Bedienfeld drücken, um die geänderten Werte abzuspeichern.
5. Zum Verlassen des Service–Modus die ”N”–Taste auf der Fernbdienung drücken

HINWEIS: Dieses FS–Gerät bietet auch die Möglichkeit eines Memory Pack, mit dem Sie die gewählten Fernsehkanäle abspeichern und auf jedes beliebige EURO3H FS–Gerät umkopieren können.

Kopieren der Einstelldaten vom FS–Gerät in das Memory Pack

1. Das Memory Pack in die AV2–Buchse an der Rückseite des FS–Gerätes stecken und das Gerät einschalten.
2. Wie schon oben beschrieben auf Service–Modus umschalten. Auf dem Bildschirm erscheint:

   Program
   External>>TV

3. Nun die blaue Taste an der Fernbedienung betätigen. Auf dem Bildschirm erscheint:

   Program
   TV>>External

4. Die Taste STORE am Fernseher drücken. Der Bildschirm meldet nun:

   Storing

5. Die im FS–Gerät abgespeicherten Kanal–Einstelldaten werden nun in das Memory Pack überspielt. bei abgeschlossener Datenübertragung meldet der Bildschirm:

   OK!

Kopieren der Einstelldaten vom Memory Pack in das FS–Gerät

1. Das Memory Pack in die AV2–Buchse an der Rückseite des FS–Gerätes stecken und das Gerät einschalten.
2. Wie schon oben beschrieben auf Service–Modus umschalten. Auf dem Bildschirm erscheint:

   Program
   External>>TV

3. Die Taste STORE am Fernseher drücken. Der Bildschirm meldet nun:

   Loading

4. Die im Memory Pack abgespeicherten Einstelldaten werden nun in das FS–Gerät überspielt. bei aggeschlossener Datenübertragung meldet der Bildschirm:

   OK!

5. Die Kanal–Einstelldaten sind damit vom Memory Pack in das FS–Gerät überspielt.
6. Zum Verlassen des Service–Modus die ”N”–Taste auf der Fernbdienung drücken
7. Der Kopiervorgang ist somit abgeschlossen, und das Memory Pack kann von der Steckerleiste abgezogen werden.

Fehler

Falls beim Gebrauch des Memory Packs Fehler aufreten, zeigt das FS–Gerät dies auf dem Bildschirm mit der folgenden Meldung an:

Program
Error!

In diesem Fall muss der Service–Modus durch Drücken der ”N”–Taste auf der Fernbedienung verlassen und anschliessend der Vorgang wiederholt werden. Falls weiterhin Fehlermeldungen erscheinen, müssen die Anschlusskontakte zwischen FS–Gerät und Memory Pack sowie die 9V Batterie im Memory Pack kontrolliert werden.

ADJUSTMENT PROCEDURE

Item/Preparation	Adjustments
Supply Voltage Check 1. Receive a standard test pattern 2. Set the controls: Brightness Minimum Contrast Minimum Volume Minimum	1. Confirm the following voltages. **E PCB**: **U5B** 5 ± 0.5V; **U8A** 8 ± 0.5V; **U9** 9 ± 0.5V; **U12** 11.8 ± 0.5V **D PCB**: **U5A** 5.1 ± 0.12V; **U5SB** 5 ± 0.25V; **TP1** 15 ± 0.7V; **U16** 18.2 ± 0.8V; **U22** 22.5 ± 1V; **U38** 39 ± 1V; **TP2** 54 ± 2.5V; **U150** 150 ± 1V; **U200** 200 ± 10V

ABGLEICH

Vorbereitung	Abgleich
Prüfen der Versorgungsspannung 1. Testbild empfangen. 2. Helligkeit auf Minimum Kontrast auf Minimum Lautstärke auf Minimum	1. Folgende Spannungen sind zu überprüfen : **E PCB**: **U5B** 5 ± 0.5V; **U8A** 8 ± 0.5V; **U9** 9 ± 0.5V; **U12** 11.8 ± 0.5V **D PCB**: **U5A** 5.1 ± 0.12V; **U5SB** 5 ± 0.25V; **TP1** 15 ± 0.7V; **U16** 18.2 ± 0.8V; **U22** 22.5 ± 1V; **U38** 39 ± 1V; **TP2** 54 ± 2.5V; **U150** 150 ± 1V; **U200** 200 ± 10V

SELF CHECK

Self check is used to automatically check the Bus lines and Hexadecimal code of the TV set.
To enter the Self Check mode press Function down button, on the Preset Panel, at the same time pressing the Status button, on the Remote Control, and the screen will show: –
When exiting Self Check the customer settings will return to factory setup.

SELBSTDIAGNOSE

1) Die Selbstdiagnose dient zum automatischen Prüfen der Bus–Leitungen sowie des Hexadezimalcodes des FS–Geräts. Zum Umschalten auf Selbstdiagnose nach dem Drücken der "F"–Taste die "Lautstärke Minus" Taste am Bedienfeld des FS–Geräts und gleichzeitig die Taste "Status" an der Fernbedienung drücken; auf dem Bildschirm erscheint hierauf: –
2) Nach der Selbstdiagnose wird das Gerät automatisch auf sämtliche werksseitigen Standardeinstellungen zurückgesetzt: –

												Hex codes
0	—	ok	Test Byte	8	—	ok	Col Decoder (M)	16	—	– –	Col Decoder (P)	09
1	—	ok	Lst Power	9	—	ok	Clock generator	17	—	– –	Q – PIP	73
2	—	ok	U5 Det	10	—	ok	V – Processor	18	—	ok	Not Used	E4
3	—	ok	Protector	11	—	ok	DFU	19	—	ok	Not Used	3C
4	—	ok	Not Used	12	—	ok	Display Processor	20	—	ok	EAROM	BB
5	—	ok	Not Used	13	—	ok	RGB Processor	21	—	ok	Audio Matrix	BF
6	—	ok	Not Used	14	—	ok	Deflection IC	22	—	ok	Video Matrix	13
7	—	ok	Not Used	15	—	ok	MSP	23	—	ok	Tuner	

If the CCU ports have been checked and found to be incorrect or not located then "– –" will appear in place of "OK".

Wenn der Hauptprozessor (CCU) an den Anschlüssen einen
Fehler erkennt, oder der entsprechende Anschluss nicht belegt ist, zeigt die entsprechende Position – – anstelle von OK an.

Alignment Settings

(The figures used below are nominal and used for representative purposes only)

The remote control is used for entering and storing adjustments. The adjustment sequence for the service mode is indicated below.

1. Set the Bass to maximum position, set the Treble to minimum position, press and hold the Reveal button on the remote control and at the same time press the –/v button on the customer controls at the front of the TV, this will place the TV into the Service Mode.
2. Press the RED / GREEN buttons to step up / down through the functions.
3. Press the YELLOW / BLUE buttons to alter the function values.
4. Press the STORE button after each adjustment has been made to store the required values.
5. To exit the Service Mode press the Normalisation button.

Alignment Function		Settings / Special features
Vertical amplitude	V–AMP 038	Optimum setting
Vertical linearity	V–LIN 022	
V–Pos.	V–POS 005	Optimum setting
Horizontal amplitude	H–AMP 043	Optimum setting
Horizontal position	H–POS 035	
EW–amplitude	E/W–AMP 1 020	Optimum setting
EW–amplitude	E/W–AMP 2 015	Optimum setting
Trapezium–comp	TRAPEZ–1 004	Optimum setting
Vert. DC.	VERT. D.C. 008	Not to be adjusted.
Text Position	TEXT POSITION 060	Optimum setting
Cutoff	– – –	Enter Service Mode and step through to Cutoff, connect an oscilloscope to the Blue Cathode and adjust the screen VR of the FBT to get 150±5V at the base of the Cutoff pulse.
Cutoff RGB	CUTOFF RGB 032 032 032	Press the GREEN button to step through thesettings. Adjust for optimum.
White RGB	WHITE RGB 032 032 032	Press the GREEN button to step through thesettings. Adjust for optimum.
Sub Brightness	SUB BRIGHT 000	Optimum setting

Abgleichtabelle

(Die angegebenen Werte sind Mittelwerte und Können individuell nach oben oder unten nach dem korrekten Abgleich abweichen)

Die Fernbedienung dient zum Eingeben und Abspeichern der Einstellwerte. Die Einstellfolge für den Service−Modus ist nachstehend beschrieben.

1. Den Tiefenregler auf Höchstellung und den Höhenregler auf Mindeststellung stellen.Nachdem die F−Taste am Bedienfeld des FS−Gerätes gedrückt wurde, die Die Taste ”Lautstärke Minus” am FS−Gerät drücken und gleichzeitig die Taste ”Reveal” auf der Fernbedienung betätigen. Hierdurch wird das FS−Gerät auf Service−Modus geschaltet.
2. Die einzelnen Funktionen mit Hilfe der ROTEN und GRÜNEN Taste anwählen.
3. Mit der GELBEN und BLAUEN Taste die Werte der einzelnen Funktionen ändern.
4. Nach jeder Einstellung die Taste STR auf der Fernbdienung oder am Bedienfeld drücken, um die geänderten Werte abzuspeichern.
5. Zum Verlassen des Service−Modus die ”N”−Taste auf der Fernbdienung drücken

Abgleichfunktion		Einstellung/Besondere Merkmale
Vertikale Amplitude	V−AMP 038	Optimale Einstellung
Vertical linearität	V−LIN 022	
V−Pos.	V−POS 005	Optimale Einstellung
Horizontale Amplitude	H−AMP 043	Optimale Einstellung
Horizontale position	H−POS 035	
OW−amplitude	E/W−AMP 1 020	Optimale Einstellung
OW−amplitude	E/W−AMP 2 015	Optimale Einstellung
Trapez−Kompensation	TRAPEZ−1 004	Optimale Einstellung
Vert. DC.	VERT. D.C. 008	Nicht einstellen
Text Position	TEXT POSITION 060	Optimale Einstellung
Cutoff	− − −	Den Service Mode aktivieren und auf Cutoff gehen. Oscilloscope an Blaukathode anschliessen und mit dem ”Screen” −Regler am Zeilentrafo die untere Spitze des Cutoff−Pulses auf 150V+/− 5V einstellen.
Cutoff RGB	CUTOFF RGB 032 032 032	Die Einstellungen mit Hilfe der GRÜNEN Taste anwählen. Optimale Einstellung.
White RGB	WHITE RGB 032 032 032	Die Einstellungen mit Hilfe der GRÜNEN Taste anwählen. Optimale Einstellung.
Grundhelligket	SUB BRIGHT 000	Optimale Einstellung

WAVEFORM PATTERN TABLE
SIGNAL TABELLE

IC 3501 PIN3 1µS 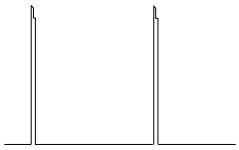	IC 3501 PIN4 1µS 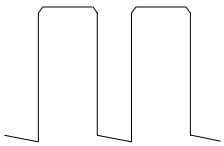	IC601 PIN25 5µS 	IC601 PIN26 5µS 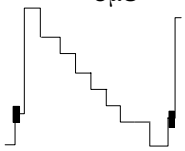
Q552 COLLECTOR 20µS 	IC 603 PIN 20 5µS 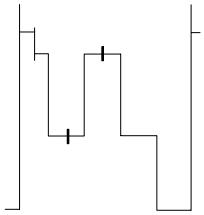	IC 603 PIN 24 5µS 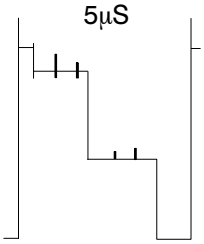	IC 603 PIN 22 5µS 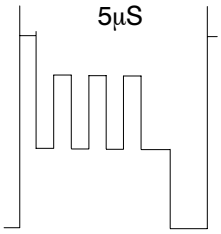
Q502 COLLECTOR 64µS 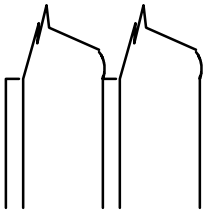	IC 1801 PIN 10 20µS 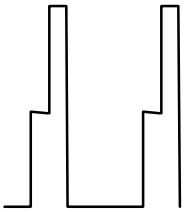	IC 1803 PIN 12 20µS 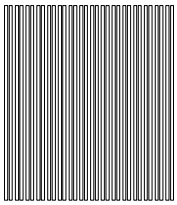	IC 1803 PIN 1 20µS 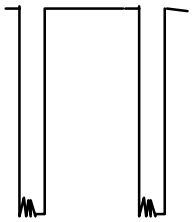
IC 1841 PIN 10 5µS 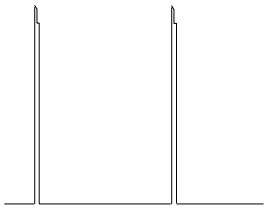	IC 1801 PIN 26 5µS 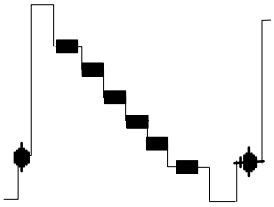	IC 371 PIN 3 20µS 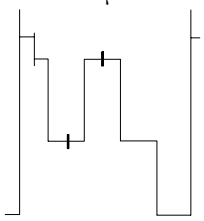	IC 351 PIN 3 20µS 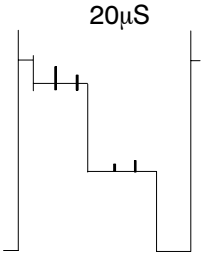
IC 361 PIN 3 20µS 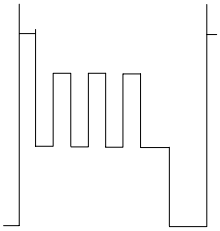	TPY1 5µS 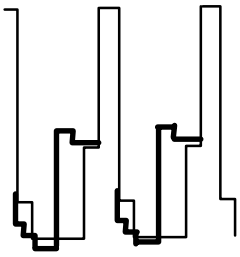	TPY2 5µS 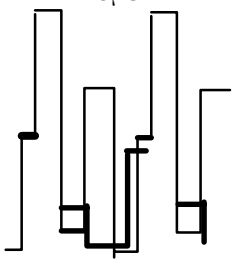	TPY3 5µS 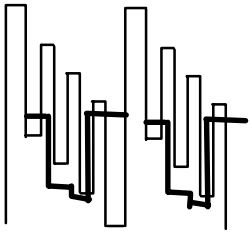

VIDEO AND AUDIO SIGNAL PROCESSING BLOCK DIAGRAM

BILDSIGNAL / TONSIGNAL BLOCKSCHEMA

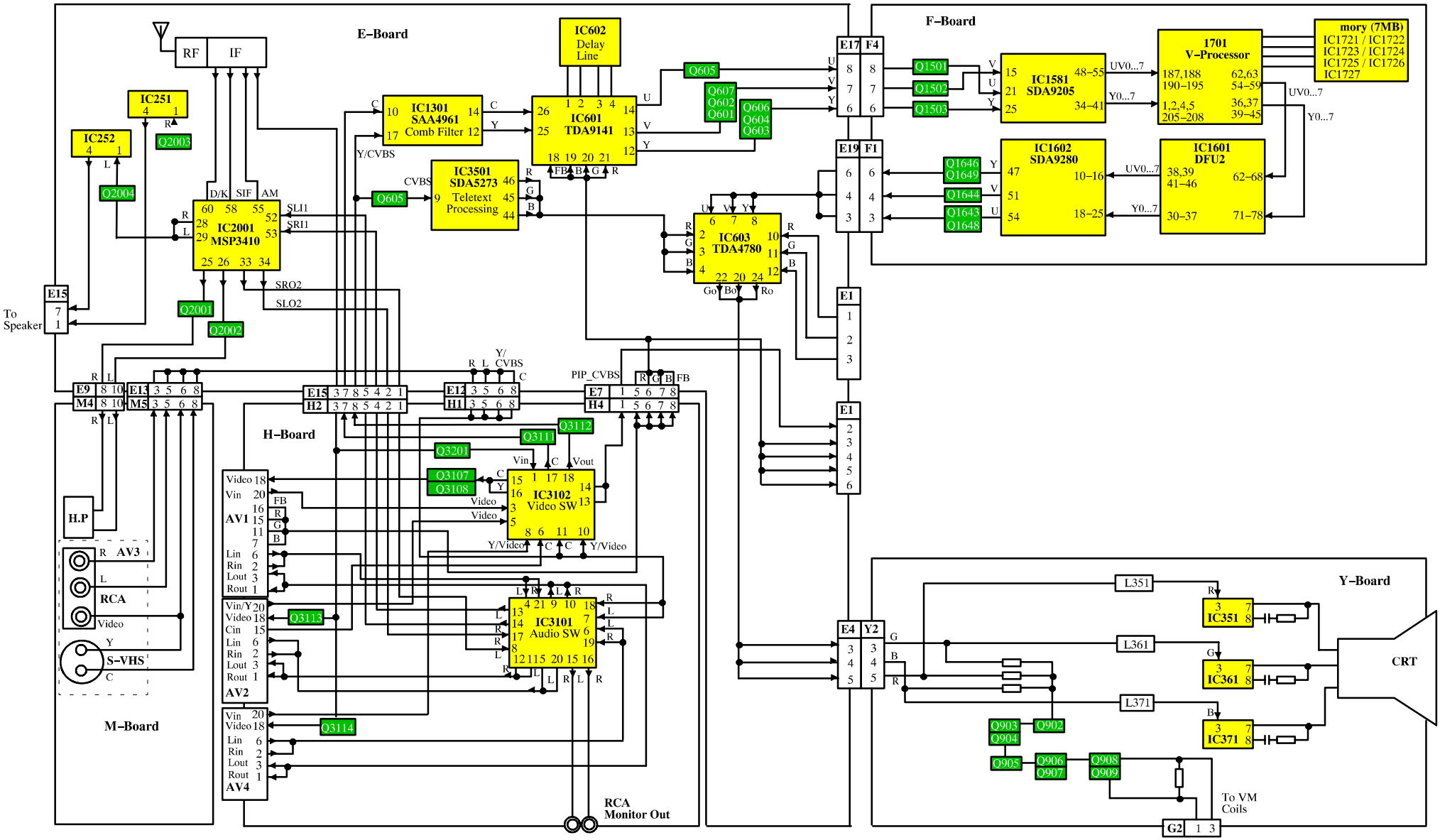

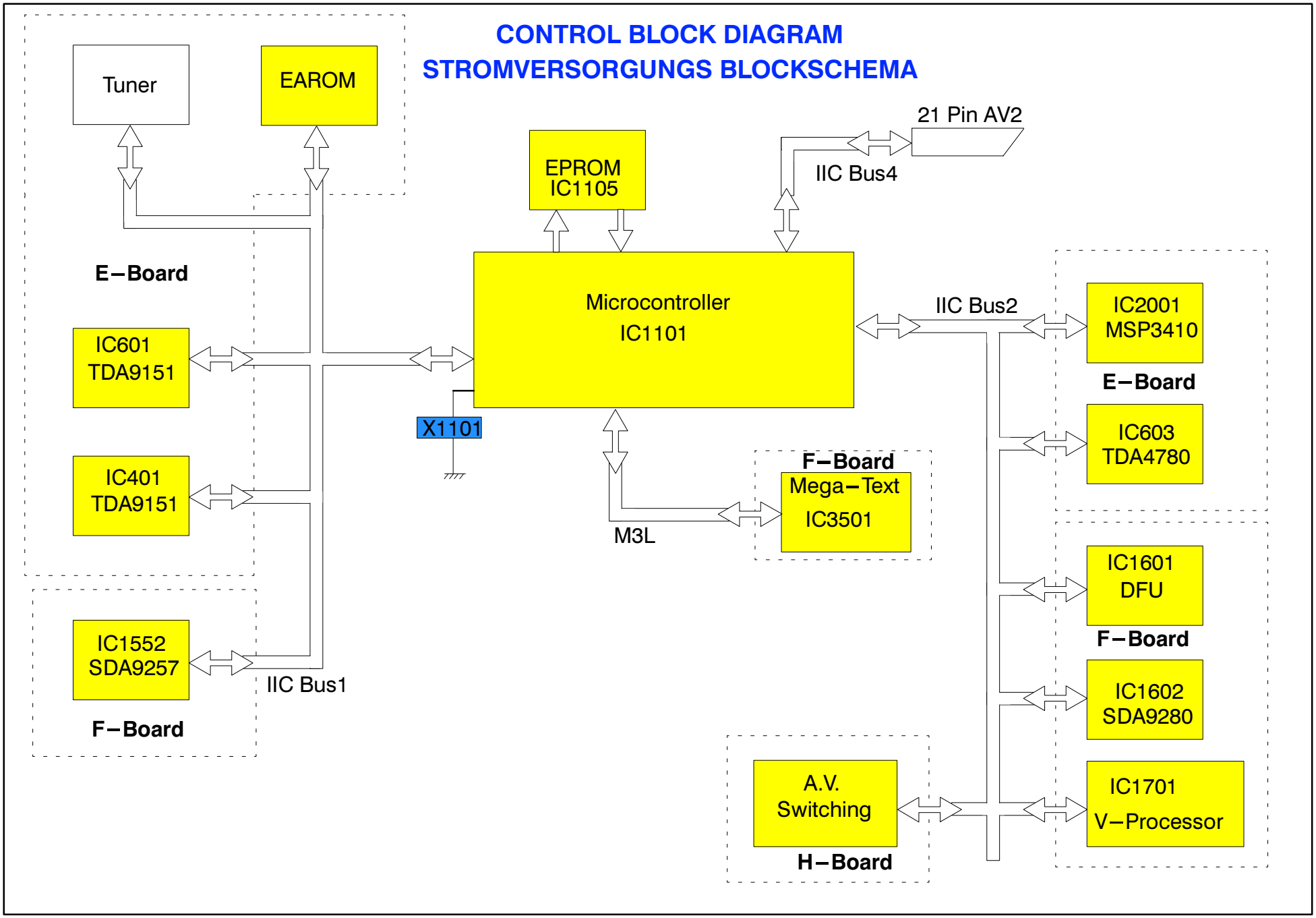
CONTROL BLOCK DIAGRAM
STROMVERSORGUNGS BLOCKSCHEMA
Tuner
EAROM
E–Board
IC601
TDA9151
IC401
TDA9151
IC1552
SDA9257
F–Board
IIC Bus1
EPROM
IC1105
Microcontroller
IC1101
X1101
M3L
F–Board
Mega–Text
IC3501
IIC Bus4
21 Pin AV2
IIC Bus2
IC2001
MSP3410
E–Board
IC603
TDA4780
IC1601
DFU
F–Board
IC1602
SDA9280
IC1701
V–Processor
A.V.
Switching
H–Board

PARTS LOCATION

NOTE :

The numbers on the exploded view below refer to the miscellaneous section of the Replacement Parts List.

EXPLOSIONSZEICHNUNG

Anmerking :

Die Nummer auf den mechanischen Teilen zeigt die Bezugsnummer der Ersatzteilliste an.

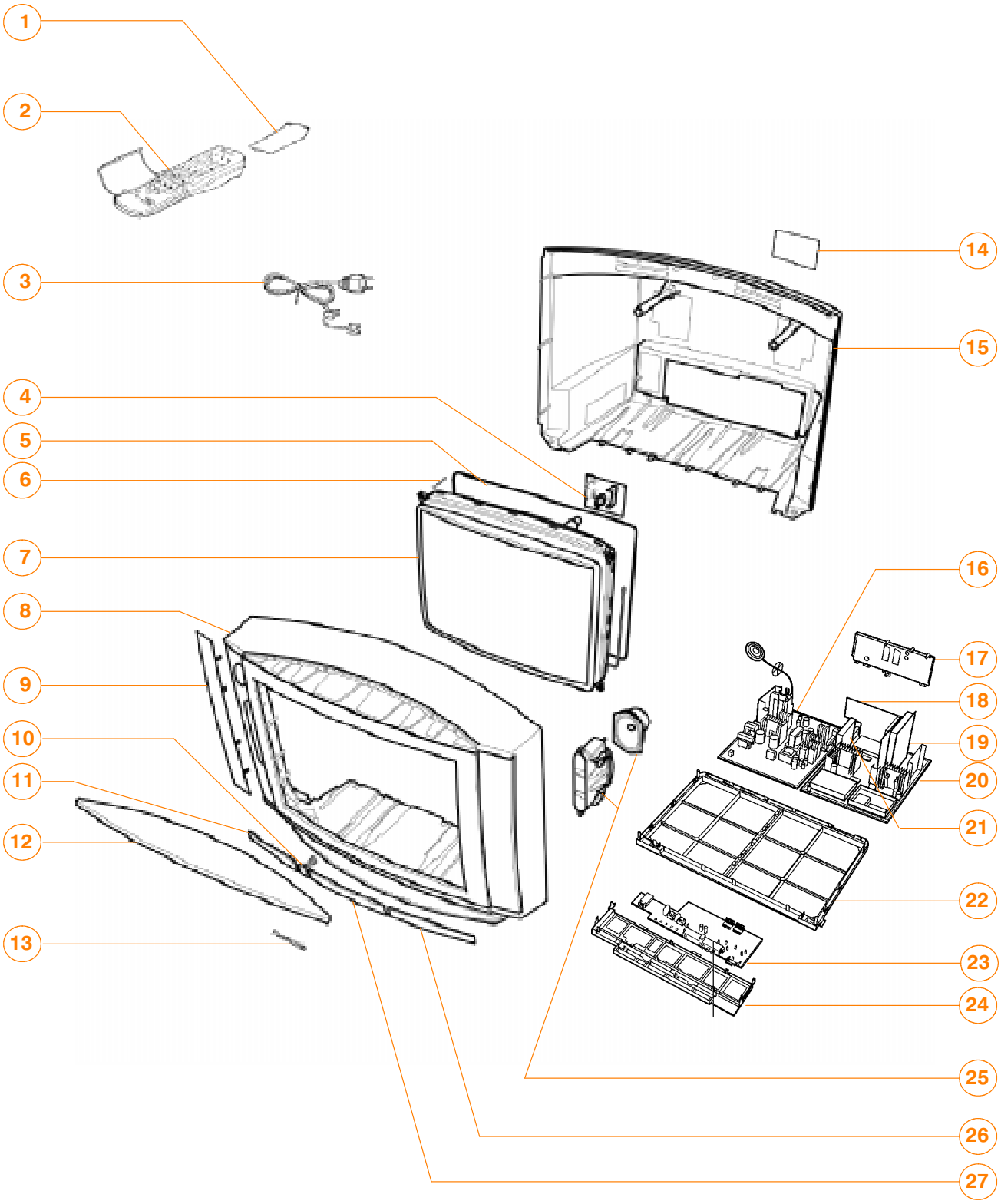

REPLACEMENT PARTS LIST

Important Safety Notice

Components identified by ⚠ mark have special characteristics important for safety. When replacing any of these components, use only manufacturer's specified parts.

ERSATZTEILLISTE

Wichtiger Sicherheitshinwels

Teile, die mit einen Hinweis ⚠ gekennzeichnet sind, sind wichtig für die Sicherhet. Solite ein Auswechsein erforderlich sein, sind unbdingt Originalteile einzusetzen.

MISCELLANEOUS COMPONENTS

Ref No.	Part No.	Description	
1)	UR51EC780	BATTERY COVER (REMOTE)	
2)	EUR51923	REMOTE CONTROL	
3)	TSX8E0020	POWER CORD	⚠
4)	TNPA0292AJ	Y P.C.B.	⚠
5)	TLK8E05125	DEGAUSS COIL	⚠
6)	VP17005−32	CRT FIXING SCREW	
7)	A66ECF61X71	CRT	⚠
8)	TKY8E161	CABINET	⚠
9)	TKP8E1169	SPEAKER NET	
10)	**********	REFER TO DIFFERENCE LIST	
11)	**********	REFER TO DIFFERENCE LIST	
12)	**********	REFER TO DIFFERENCE LIST	
13)	TBM8E1728	PANASONIC BADGE	
14)	TBM8E1731	MODEL LABEL	
15)	TKU8E00320	REAR COVER	⚠
16)	TNPA0295AM	D P.C.B.	⚠
17)	TKP8E1166	AV COVER	
18)	TNPA0293AB	H P.C.B.	⚠
19)	TNPA0294AD	F P.C.B.	⚠
20)	TNPH0063AS	E P.C.B.	⚠
21)	TNPA0317AA	B P.C.B.	⚠
22)	TMX8E014−1	CHASSIS FRAME	
23)	TNPA0766AB	M P.C.B.	⚠
24)	TMW8E025	CONTROL BRACKET	
25)	EAG1216A2	SPEAKER	
26)	**********	REFER TO DIFFERENCE LIST	
27)	**********	REFER TO DIFFERENCE LIST	
	TBM8E1616	PRESET LABEL	
	TBM8E1675	REAR AV LABEL	
	UM−3DEP−2P	BATTERY	
	TEK6940	LID CATCHER	
	TES8E015	POWER BUTTON SPRING	
	ENV57D03G3	TUNER	⚠
	TQB8E2368A	GERMAN INST BOOK	⚠
	TQB8E2368B	DUTCH INST BOOK	⚠
	TQB8E2368C	ITALIAN INST BOOK	⚠
	TQA8E2041	SCHEMATIC BROADSHEET	⚠
	TMW8E020−1	LED HOLDER	
	TMX8E015	PCB SUPPORT BRACKET	
	TPC8E4612	OUTER CARTON	
	TPD8E633	TOP CUSHION	
	TPD8E634	BOTTOM CUSHION	
	31221212478	FIX CLIP	
	TES4537	SPRING	
	TES4537	SPRING	
	TES4537	SPRING	
	832AG11D−ESL	I.C.SOCKET	
	ERC12GK825	SOLID 0.5W 10% 8M2Ω	
	PCS−068A−1	68 PIN I.C. SOCKET	

INTEGRATED CIRCUITS

Ref No.	Part No.	Description
IC101	TDA9814TV3	VIF
IC1051	RPM−637CBRL	LED RECEIVER
IC1101	SDA30C164−2	MICRO PROCESSOR
IC1102	S−80745AL−Z	RESET
IC1103	MN1280R	RESET
IC1104	X24C0301PB	EAROM
IC1105	27C2001C12AA	EPROM
IC1551	SN74F04DR	CLOCK
IC1552	SDA9257	CLOCK GENERATOR
IC1581	SDA9205−2GEG	A/D CONVERTER
IC1601	UPD93213GF	DFU
IC1602	SDA9280B21GE	VISUAL PROCESSOR
IC1701	MB87D202A	VIDEO PROCESSOR
IC1721	SDA9251−2XGE	RAM
IC1722	SDA9251−2XGE	RAM
IC1723	SDA9251−2XGE	RAM
IC1724	SDA9251−2XGE	RAM
IC1725	SDA9251−2XGE	RAM
IC1726	SDA9251−2XGE	RAM
IC1727	SDA9251−2XGE	RAM
IC2001	MSP3400CPPC6	AUDIO PROCESSOR
IC3101	TEA6420	AUDIO SWITCH
IC3102	TEA6415C	VIDEO SWITCH
IC3501	SDA5273S/134	MEGA TEXT
IC3502	M514256B70RS	DRAM
IC351	TDA6111	RGB OUTPUT
IC361	TDA6111	RGB OUTPUT
IC371	TDA6111	RGB OUTPUT
IC3804	AN7809FLB	9V REGULATOR
IC3805	AN78L08TA	8V REGULATOR
IC401	TDA9151−B	DEFLECTION CONTROL
IC601	TDA9143−N1	COLOUR DECODER
IC602	TDA4665−V4	DELAY LINE
IC603	TDA4780	RGB VIDEO PROCESSOR
IC845	SE140N	ERROR AMPLIFIER
IC851	TL431ACLPM	COIL
IC852	TL431ACLPM	COIL

CAPACITORS

C002	ECUV1H102JCX	S.M.CAP	50V	1nF
C003	ECA1HM101GB	ELECT	50V	100pF
C004	ECUV1H102JCX	S.M.CAP	50V	1nF
C005	ECUV1H102JCX	S.M.CAP	50V	1nF
C006	ECUV1H102JCX	S.M.CAP	50V	1nF
C007	ECUV1H102JCX	S.M.CAP	50V	1nF
C009	ECA1HMR22GB	ELECT	50V	0.22μF
C010	ECUV1H102KBX	S.M.CAP	50V	1nF
C014	ECUV1H103ZFX	S.M.CAP	50V	10nF
C015	ECUV1H390JCX	S.M.CAP	50V	39pF
C016	ECUV1H390JCX	S.M.CAP	50V	39pF
C017	ECA1CM470GB	ELECT	16V	47μF
C019	ECUV1H561JCX	S.M.CAP	50V	560pF
C020	ECUV1H103ZFX	S.M.CAP	50V	10nF
C022	ECUV1H103ZFX	S.M.CAP	50V	10nF
C023	ECUV1H681JCX	S.M.CAP	50V	680pF
C024	ECUV1H103ZFX	S.M.CAP	50V	10nF
C025	ECUV1H101JCX	S.M.CAP	50V	100pF
C026	ECUV1H681JCX	S.M.CAP	50V	680pF
C101	ECUV1H104ZFX	S.M.CAP	50V	100nF
C106	ECUV1H104ZFX	S.M.CAP	50V	100nF
C108	ECUV1H104ZFX	S.M.CAP	50V	100nF
C109	ECUV1H104ZFX	S.M.CAP	50V	100nF
C111	ECUV1H103ZFX	S.M.CAP	50V	10nF
C113	ECUV1H393KBX	S.M.CAP	50V	39nF
C115	ECUV1H104ZFX	S.M.CAP	50V	100nF

Ref No.	Part No.	Description			
C116	ECUV1H030CPX	S.M.CAP	50V	30pF	
C117	ECUV1H070DTX	S.M.CAP	50V	70pF	
C118	ECEA1CKA100	ELECT	16V	10μF	
C120	ECEA1HKA2R2	ELECT	50V	2.2μF	
C121	ECEA1HKA2R2	ELECT	50V	2.2μF	
C122	ECUV1C105ZFX	S.M.CAP	16V	1000nF	
C123	ECEA1HKA2R2	ELECT	50V	2.2μF	
C124	ECUV1H471JCX	S.M.CAP	50V	470pF	
C125	ECUV1H104ZFX	S.M.CAP	50V	100nF	
C126	ECUV1H104ZFX	S.M.CAP	50V	100nF	
C127	ECEA1CKA100	ELECT	16V	10μF	
C128	ECUV1H102KBX	S.M.CAP	50V	1nF	
C129	ECEA1CKA100	ELECT	16V	10μF	
C130	ECUV1H104ZFX	S.M.CAP	50V	100nF	
C131	ECUV1H102KBX	S.M.CAP	50V	1nF	
C132	ECUV1H102KBX	S.M.CAP	50V	1nF	
C133	ECUV1H102KBX	S.M.CAP	50V	1nF	
C134	ECUV1H104ZFX	S.M.CAP	50V	100nF	
C135	ECEA1CKA100	ELECT	16V	10μF	
C136	ECUV1H104ZFX	S.M.CAP	50V	100nF	
C137	ECUV1H100DCX	S.M.CAP	50V	10pF	
C138	ECUV1H151JCX	S.M.CAP	50V	150pF	
C139	ECUV1H104ZFX	S.M.CAP	50V	100nF	
C140	ECUV1H151JCX	S.M.CAP	50V	150pF	
C142	ECUV1H100DCX	S.M.CAP	50V	10pF	
C143	ECUV1H220JCX	S.M.CAP	50V	22pF	
C144	ECUV1H151JCX	S.M.CAP	50V	150pF	
C145	ECUV1H151JCX	S.M.CAP	50V	150pF	
C146	ECUV1H120JCX	S.M.CAP	50V	12pF	
C148	ECUV1H103ZFX	S.M.CAP	50V	10nF	
C150	ECEA1CKA100	ELECT	16V	10μF	
C151	ECUV1H104ZFX	S.M.CAP	50V	100nF	
C152	ECUV1H104ZFX	S.M.CAP	50V	100nF	
C153	ECUV1H120JCX	S.M.CAP	50V	12pF	
C158	ECUV1H103ZFX	S.M.CAP	50V	10nF	
C159	ECUV1H080CCX	S.M.CAP	50V	80pF	
C251	ECQM1H474J	FILM	50V	470nF	
C252	ECUV1H222JCX	S.M.CAP	50V	2.2nF	
C254	ECUV1H393KBX	S.M.CAP	50V	39nF	
C255	ECEA1CN100	ELECT	16V	10μF	
C256	ECA1HM330B	ELECT	50V	33pF	
C257	ECA1HM100GB	ELECT	50V	10pF	
C258	ECQM1H474J	FILM	50V	470nF	
C259	ECUV1H222JCX	S.M.CAP	50V	2.2nF	
C261	ECUV1H393KBX	S.M.CAP	50V	39nF	
C262	ECEA1CN100	ELECT	16V	10μF	
C263	ECA1HM330B	ELECT	50V	33pF	
C264	ECA1HM100GB	ELECT	50V	10pF	
C267	ECUV1H103ZFX	S.M.CAP	50V	10nF	
C268	ECUV1H223ZFX	S.M.CAP	50V	22nF	
C269	ECA1EM222GB	ELECT	25V	2.2nF	
C270	ECA1EM222GB	ELECT	25V	2.2nF	
C271	ECA1HM010GB	ELECT	50V	1pF	
C272	ECA1HM010GB	ELECT	50V	1pF	
C273	ECA1HM010GB	ELECT	50V	1pF	
C274	ECA1HM010GB	ELECT	50V	1pF	
C275	ECUV1C184KBX	S.M.CAP	16V	0.18μF	
C276	ECUV1C184KBX	S.M.CAP	16V	0.18μF	
C277	ECEA1HU471	ELECT	50V	470μF	
C280	ECUV1H562KBX	S.M.CAP	50V	5.6nF	
C281	ECUV1H561JCX	S.M.CAP	50V	560pF	
C282	ECUV1H561JCX	S.M.CAP	50V	560pF	
C283	ECUV1H561JCX	S.M.CAP	50V	560pF	
C352	ECUV1H224ZFX	S.M.CAP	50V	0.22μF	
C353	ECUV1H103KBX	S.M.CAP	50V	10nF	
C354	ECKC2H103J	CERAMIC	50V	10nF	⚠
C355	ECKC2H102J	CERAMIC	500V	1nF	⚠
C362	ECUV1H224ZFX	S.M.CAP	50V	0.22μF	
C363	ECUV1H103KBX	S.M.CAP	50V	10nF	
C364	ECKC2H103J	CERAMIC	50V	10nF	⚠
C365	ECKC2H102J	CERAMIC	500V	1nF	⚠
C372	ECUV1H224ZFX	S.M.CAP	50V	0.22μF	

Ref No.	Part No.	Description			
C373	ECUV1H103KBX	S.M.CAP	50V	10nF	
C374	ECKC2H103J	CERAMIC	50V	10nF	⚠
C375	ECKC2H102J	CERAMIC	500V	1nF	⚠
C381	ECA1HM101GB	ELECT	50V	100pF	
C382	ECA0JM471GB	ELECT	6.3V	470pF	
C383	ECUV1H103KBX	S.M.CAP	50V	10nF	
C384	ECQM2104KZ	FILM	250V	100nF	
C385	ECEA2EU220	ELECT	250V	22μF	
C386	ECKC3D152J	CERAMIC	2KV	1.5nF	⚠
C395	ECQM1H104J	FILM	50V	100nF	
C402	ECUV1H104ZFX	S.M.CAP	50V	100nF	
C403	ECA1AM332E	ELECT	10V	3.3nF	
C404	ECUV1H104ZFX	S.M.CAP	50V	100nF	
C405	ECUV1H104ZFX	S.M.CAP	50V	100nF	
C406	ECUV1H471JCX	S.M.CAP	50V	470pF	
C409	ECUV1H101JCX	S.M.CAP	50V	100pF	
C413	ECUV1H561KBX	S.M.CAP	50V	560pF	
C451	ECUV1H104ZFX	S.M.CAP	50V	100nF	
C452	ECA1EM332E	ELECT	25V	3.3nF	
C453	ECEA1HU101	ELECT	50V	100μF	
C455	ECEA1HN100	ELECT	50V	10μF	
C456	ECQV1104JZ3	FILM	100V	100nF	
C457	ECUV1H102JCX	S.M.CAP	50V	1nF	
C462	ECKC3A471J	CERAMIC	1KV	470pF	⚠
C463	ECUV1H102KBX	S.M.CAP	50V	1nF	
C464	ECKC1H102J	CERAMIC	50V	1000pF	
C501	ECQM1H224J	FILM	50V	220nF	
C502	ECQM2683JZ	FILM	250V	68nF	
C503	ECKC2H102J	CERAMIC	500V	1nF	⚠
C504	ECQB1H223K	FILM	50V	22nF	
C506	ECKC2H102J	CERAMIC	500V	1nF	⚠
C552	ECWH15H392J	FILM	1500V	3.9nF	
C553	ECQP1104JZW	FILM	100V	0.10μF	
C555	ECWH15H472J	FILM	1500V	4700μF	
C556	ECEA2CNR47SB	ELECT	160V	R47μF	
C557	ECKC2H331J	CERAMIC	500V	330pF	⚠
C558	ECA2EM330B	ELECT	250V	33pF	
C559	ECKC2H101J	CERAMIC	500V	100pF	⚠
C560	ECA1EM332E	ELECT	25V	3.3nF	
C561	ECKC2H561J	CERAMIC	500V	560pF	⚠
C562	ECA1JM220B	ELECT	63V	22pF	
C563	TAC7A2D564JC	CERAMIC	1500V	0.56μF	
C564	ECKC1H472J	CERAMIC	50V	4.7nF	
C565	ECQP1823JZW	FILM	100V	82nF	
C571	ECQV1H105JZ	FILM	50V	1μF	
C572	ECWH15H472J	FILM	1500V	4700μF	
C573	ECQF4153JZH	FILM	400V	15nF	
C574	TAC1114Z684A	CERAMIC	400V	0.68μF	
C575	TAC1114Z684A	CERAMIC	400V	0.68μF	
C581	ECQF4123JZH	FILM	400V	12nF	
C584	ECKC3D221JB	CERAMIC	2KV	220pF	
C585	ECKC3A471J	CERAMIC	1KV	470pF	⚠
C586	ECKC1H103JB	CERAMIC	50V	10nF	
C601	ECUV1H104ZFX	S.M.CAP	50V	100nF	
C602	ECUV1H104ZFX	S.M.CAP	50V	100nF	
C603	ECUV1H104ZFX	S.M.CAP	50V	100nF	
C604	ECUV1H104ZFX	S.M.CAP	50V	100nF	
C605	ECUV1H104ZFX	S.M.CAP	50V	100nF	
C606	ECUV1H104ZFX	S.M.CAP	50V	100nF	
C608	ECUV1H104ZFX	S.M.CAP	50V	100nF	
C609	ECUV1H180JCX	S.M.CAP	50V	18pF	
C610	ECUV1H150JCX	S.M.CAP	50V	15pF	
C611	ECUV1H104ZFX	S.M.CAP	50V	100nF	
C612	ECUV1H332ZFX	S.M.CAP	50V	3.3nF	
C613	ECUV1C474ZFX	S.M.CAP	16V	0.47μF	
C614	ECUV1H332ZFX	S.M.CAP	50V	3.3nF	
C615	ECUV1H104ZFX	S.M.CAP	50V	100nF	
C616	ECUV1H104ZFX	S.M.CAP	50V	100nF	
C617	ECA1CM220GB	ELECT	16V	22μF	
C618	ECUV1H104ZFX	S.M.CAP	50V	100nF	
C619	ECUV1H104ZFX	S.M.CAP	50V	100nF	

Ref No.	Part No.	Description			
C620	ECUV1H104ZFX	S.M.CAP	50V	100nF	
C621	ECUV1H104ZFX	S.M.CAP	50V	100nF	
C622	ECUV1H104ZFX	S.M.CAP	50V	100nF	
C623	ECUV1H103ZFX	S.M.CAP	50V	10nF	
C624	ECUV1H103ZFX	S.M.CAP	50V	10nF	
C625	ECUV1H103ZFX	S.M.CAP	50V	10nF	
C626	ECUV1H103ZFX	S.M.CAP	50V	10nF	
C627	ECUV1H103ZFX	S.M.CAP	50V	10nF	
C628	ECUV1H103ZFX	S.M.CAP	50V	10nF	
C629	ECUV1H103ZFX	S.M.CAP	50V	10nF	
C630	ECUV1H103ZFX	S.M.CAP	50V	10nF	
C631	ECUV1H103ZFX	S.M.CAP	50V	10nF	
C632	ECUV1H103ZFX	S.M.CAP	50V	10nF	
C633	ECUV1H470JCX	S.M.CAP	50V	47pF	
C634	ECA1CM221GB	ELECT	16V	220pF	
C635	ECA1HM220GB	ELECT	50V	22pF	
C636	ECA1HM010GB	ELECT	50V	1pF	
C637	ECQM1H224J	FILM	50V	220nF	
C638	ECA1HM010GB	ELECT	50V	1pF	
C639	ECQM1H224J	FILM	50V	220nF	
C640	ECQM1H224J	FILM	50V	220nF	
C641	ECQM1H224J	FILM	50V	220nF	
C642	ECA1AM470GB	ELECT	10V	47pF	
C643	ECUV1H104ZFX	S.M.CAP	50V	100nF	
C644	ECA1CM470GB	ELECT	16V	47μF	
C645	ECUV1H104ZFX	S.M.CAP	50V	100nF	
C646	ECUV1H104ZFX	S.M.CAP	50V	100nF	
C647	ECEA1CN470	ELECT	16V	47μF	
C648	ECEA1CN470	ELECT	16V	47μF	
C651	ECUV1H820JCX	S.M.CAP	50V	82pF	
C654	ECUV1H393KBX	S.M.CAP	50V	39nF	
C655	ECUV1E563KBX	S.M.CAP	25V	56nF	
C657	ECUV1C474ZFX	S.M.CAP	16V	0.47μF	
C659	ECUV1H821KBX	S.M.CAP	50V	820pF	
C661	ECUV1H103ZFX	S.M.CAP	50V	10nF	
C662	ECUV1H470JCX	S.M.CAP	50V	47pF	
C663	ECUV1H150JCX	S.M.CAP	50V	15pF	
C664	ECUV1H103ZFX	S.M.CAP	50V	10nF	
C703	ECUV1C224KBX	S.M.CAP	16V	220nF	
C752	ECKC2H103J	CERAMIC	50V	10nF	⚠
C803	ECQE2A474MWB	FILM	100V	0.47μF	
C804	ECQU2A154MN	FILM	250V	150nF	
C806	ECQE6104K	FILM	600V	100nF	⚠
C807	ECQB1H473K	FILM	50V	47nF	
C808	ECQB1H333J	FILM	50V	33nF	
C810	222233510154	CAPACITOR		0.15μF	
C811	ECQB1H104J	FILM	50V	100nF	
C812	ECQB1H222J	FILM	50V	2200pF	
C813	ECKC2H472J	CERAMIC	500V	4.7nF	⚠
C814	ECKC2H472J	CERAMIC	500V	4.7nF	⚠
C815	ECA1CM331B	ELECT	16V	330pF	
C816	ECQB1H122J	FILM	50V	1.2nF	
C817	ECKC2H472J	CERAMIC	500V	4.7nF	⚠
C818	ECKC2H472J	CERAMIC	500V	4.7nF	⚠
C819	ECOS2GA181DB	ELECT	400V	180pF	
C820	ECOS2GA181DB	ELECT	400V	180pF	
C821	ECQB1H222J	FILM	50V	2200pF	
C822	ECKC3D102J	CERAMIC	2KV	1nF	⚠
C823	EEUFA1V221B	CERAMIC	35V	220pF	
C824	ECQB1H121KF3	FILM	50V	120pF	
C826	ECQB1H473K	FILM	50V	47nF	
C827	ECKCNS332J	CERAMIC	1.2KV	3.3nF	⚠
C830	ECQE4105JFW	FILM	400V	1μF	
C831	ECKC3D471JB	CERAMIC	2KV	470pF	⚠
C833	ECQB1H682K	FILM	50V	6.8nF	
C834	ECQB1H471KF3	FILM	50V	0pF	
C835	ECQB1H152K	FILM	50V	1.5nF	
C848	ECKC2H471J	CERAMIC	500V	470pF	⚠
C849	ECKC2H471J	CERAMIC	500V	470pF	⚠
C851	ECQM1H104J	FILM	50V	100nF	
C852	ECKC3D102J	CERAMIC	2KV	1nF	⚠
C853	ECA1CM471GB	ELECT	16V	470pF	

Ref No.	Part No.	Description			
C854	ECA1EM471GB	ELECT	25V	470pF	
C855	ECEA1HU102	ELECT	50V	1000μF	
C856	ECEA1HU471	ELECT	50V	470μF	
C857	ECA1EM471GB	ELECT	25V	470pF	
C858	ECOS2EA271BB	ELECT	250V	270pF	
C859	ECKC2H471J	CERAMIC	500V	470pF	⚠
C861	ECOS2EA221AB	ELECT	250V	220μF	
C863	ECA1EM222GB	ELECT	25V	2.2nF	
C864	ECA0JM102GB	ELECT	6.3V	1nF	
C866	ECA1HM101GB	ELECT	50V	100pF	
C867	ECA1CM222GB	ELECT	16V	2200μF	
C868	ECA1CM100GB	ELECT	16V	10pF	
C871	ECA0JM102GB	ELECT	6.3V	1nF	
C872	ECA1CM222GB	ELECT	16V	2200μF	
C901	ECUV1H030CCX	S.M.CAP	50V	30pF	
C902	ECA1VM101GB	ELECT	35V	100pF	
C903	ECA1CM470GB	ELECT	16V	47μF	
C904	ECUV1H103ZFX	S.M.CAP	50V	10nF	
C905	ECA1CM100GB	ELECT	16V	10pF	
C906	ECUV1H151JCX	S.M.CAP	50V	150pF	
C908	ECUV1H151JCX	S.M.CAP	50V	150pF	
C909	ECKC2H472J	CERAMIC	500V	4.7nF	⚠
C910	ECKC2H472J	CERAMIC	500V	4.7nF	⚠
C911	ECUV1H151JCX	S.M.CAP	50V	150pF	
C912	ECEA2EU220	ELECT	250V	22μF	
C913	ECA1HM101GB	ELECT	50V	100pF	
C914	ECA1HM101GB	ELECT	50V	100pF	
C915	ECA1CM471GB	ELECT	16V	470pF	
C916	ECEA2EU220	ELECT	250V	22μF	
C917	ECA1HM100GB	ELECT	50V	10pF	
C918	ECUV1H103ZFX	S.M.CAP	50V	10nF	
C919	ECCR2H680J	CERAMIC	500V	68pF	
C1051	ECKC1H101J	CERAMIC	50V	100pF	
C1052	ECA1VM470B	ELECT	35V	47pF	
C1053	ECKC1H103JB	CERAMIC	50V	10nF	
C1102	ECUV1H104ZFX	S.M.CAP	50V	100nF	
C1103	ECUV1H104ZFX	S.M.CAP	50V	100nF	
C1104	ECA0JM101G	ELECT	6.3V	100pF	
C1105	ECUV1H330JCX	S.M.CAP	50V	33pF	
C1106	ECUV1H330JCX	S.M.CAP	50V	33pF	
C1107	ECUV1H391JCX	S.M.CAP	50V	390pF	
C1108	ECUV1H103ZFX	S.M.CAP	50V	10nF	
C1109	ECUV1H472KBX	S.M.CAP	50V	4.7nF	
C1110	ECUV1H104ZFX	S.M.CAP	50V	100nF	
C1111	ECUV1H101JCX	S.M.CAP	50V	100pF	
C1112	ECUV1H103ZFX	S.M.CAP	50V	10nF	
C1114	ECUV1H102JCX	S.M.CAP	50V	1nF	
C1115	ECUV1H102JCX	S.M.CAP	50V	1nF	
C1126	ECUV1H104ZFX	S.M.CAP	50V	100nF	
C1127	ECUV1H104ZFX	S.M.CAP	50V	100nF	
C1129	ECA1AM470GB	ELECT	10V	47pF	
C1130	ECUV1H104ZFX	S.M.CAP	50V	100nF	
C1131	ECUV1H101JCX	S.M.CAP	50V	100pF	
C1133	ECUV1C184KBX	S.M.CAP	16V	0.18μF	
C1134	ECUV1H103KBX	S.M.CAP	50V	10nF	
C1135	ECUV1H103ZFX	S.M.CAP	50V	10nF	
C1136	ECUV1H101JCX	S.M.CAP	50V	100pF	
C1137	ECUV1H102KBX	S.M.CAP	50V	1nF	
C1138	ECUV1H104ZFX	S.M.CAP	50V	100nF	
C1302	ECUV1H150JCX	S.M.CAP	50V	15pF	
C1304	ECUV1H103ZFX	S.M.CAP	50V	10nF	
C1305	ECA1HM101GB	ELECT	50V	100pF	
C1317	ECUV1H104ZFX	S.M.CAP	50V	100nF	
C1318	ECA1HM101GB	ELECT	50V	100pF	
C1321	ECUV1H104ZFX	S.M.CAP	50V	100nF	
C1322	ECUV1H101JCX	S.M.CAP	50V	100pF	
C1327	ECUV1H104ZFX	S.M.CAP	50V	100nF	
C1508	ECUV1H103KBX	S.M.CAP	50V	10nF	
C1509	ECA1CM100GB	ELECT	16V	10pF	
C1518	ECA1HM101GB	ELECT	50V	100pF	
C1519	ECA1CM470GB	ELECT	16V	47μF	
C1520	ECA1CM470GB	ELECT	16V	47μF	

Ref No.	Part No.	Description		
C1521	ECUV1H390JCX	S.M.CAP	50V	39pF
C1524	ECUV1H221JCX	S.M.CAP	50V	220pF
C1525	ECUV1H391JCX	S.M.CAP	50V	390pF
C1528	ECUV1H390JCX	S.M.CAP	50V	39pF
C1529	ECUV1H221JCX	S.M.CAP	50V	220pF
C1531	ECUV1H391JCX	S.M.CAP	50V	390pF
C1532	ECUV1H151JCX	S.M.CAP	50V	150pF
C1533	ECUV1H750JCX	S.M.CAP	50V	75pF
C1534	ECUV1H391JCX	S.M.CAP	50V	390pF
C1537	ECA0JM102GB	ELECT	6.3V	1nF
C1552	ECUV1H104ZFX	S.M.CAP	50V	100nF
C1554	ECUV1H104ZFX	S.M.CAP	50V	100nF
C1555	ECA0JM331GB	ELECT	6.3V	330pF
C1556	ECUV1H270JCX	S.M.CAP	50V	27pF
C1557	ECUV1H270JCX	S.M.CAP	50V	27pF
C1559	ECUV1H103KBX	S.M.CAP	50V	10nF
C1560	ECUV1H103KBX	S.M.CAP	50V	10nF
C1561	ECUV1H104ZFX	S.M.CAP	50V	100nF
C1562	ECA0JM331GB	ELECT	6.3V	330pF
C1564	ECUV1H104ZFX	S.M.CAP	50V	100nF
C1575	ECUV1H104ZFX	S.M.CAP	50V	100nF
C1576	ECUV1H104ZFX	S.M.CAP	50V	100nF
C1577	ECA1CM470GB	ELECT	16V	47μF
C1579	ECUV1H104ZFX	S.M.CAP	50V	100nF
C1580	ECUV1H104ZFX	S.M.CAP	50V	100nF
C1583	ECUV1H104ZFX	S.M.CAP	50V	100nF
C1584	ECUV1H104ZFX	S.M.CAP	50V	100nF
C1585	ECUV1H104ZFX	S.M.CAP	50V	100nF
C1586	ECUV1H104ZFX	S.M.CAP	50V	100nF
C1588	ECA1CM470GB	ELECT	16V	47μF
C1590	ECUV1H104ZFX	S.M.CAP	50V	100nF
C1591	ECUV1H104ZFX	S.M.CAP	50V	100nF
C1592	ECUV1H104ZFX	S.M.CAP	50V	100nF
C1593	ECA1CM470GB	ELECT	16V	47μF
C1594	ECUV1H104ZFX	S.M.CAP	50V	100nF
C1595	ECUV1H104ZFX	S.M.CAP	50V	100nF
C1596	ECUV1H104ZFX	S.M.CAP	50V	100nF
C1599	ECA1CM470GB	ELECT	16V	47μF
C1601	ECUV1H104ZFX	S.M.CAP	50V	100nF
C1602	ECUV1H104ZFX	S.M.CAP	50V	100nF
C1603	ECUV1H103KBX	S.M.CAP	50V	10nF
C1604	ECUV1H104ZFX	S.M.CAP	50V	100nF
C1605	ECUV1H104ZFX	S.M.CAP	50V	100nF
C1606	ECUV1H104ZFX	S.M.CAP	50V	100nF
C1607	ECUV1H104ZFX	S.M.CAP	50V	100nF
C1608	ECA1CM470GB	ELECT	16V	47μF
C1610	ECUV1H104ZFX	S.M.CAP	50V	100nF
C1611	ECUV1H103KBX	S.M.CAP	50V	10nF
C1612	ECUV1H104ZFX	S.M.CAP	50V	100nF
C1613	ECUV1H104ZFX	S.M.CAP	50V	100nF
C1614	ECUV1H104ZFX	S.M.CAP	50V	100nF
C1616	ECUV1H152JCX	S.M.CAP	50V	1.5pF
C1617	ECUV1H104ZFX	S.M.CAP	50V	100nF
C1618	ECUV1H104ZFX	S.M.CAP	50V	100nF
C1619	ECUV1H104ZFX	S.M.CAP	50V	100nF
C1620	ECUV1H104ZFX	S.M.CAP	50V	100nF
C1621	ECA1CM470GB	ELECT	16V	47μF
C1622	ECUV1H104ZFX	S.M.CAP	50V	100nF
C1625	ECA1CM470GB	ELECT	16V	47μF
C1641	ECA1CM470GB	ELECT	16V	47μF
C1642	ECUV1H104ZFX	S.M.CAP	50V	100nF
C1701	ECA1CM470GB	ELECT	16V	47μF
C1702	ECUV1H104ZFX	S.M.CAP	50V	100nF
C1703	ECUV1H104ZFX	S.M.CAP	50V	100nF
C1704	ECUV1H104ZFX	S.M.CAP	50V	100nF
C1705	ECUV1H104ZFX	S.M.CAP	50V	100nF
C1706	ECUV1H104ZFX	S.M.CAP	50V	100nF
C1707	ECUV1H104ZFX	S.M.CAP	50V	100nF
C1708	ECUV1H104ZFX	S.M.CAP	50V	100nF
C1709	ECUV1H104ZFX	S.M.CAP	50V	100nF
C1710	ECUV1H104ZFX	S.M.CAP	50V	100nF
C1711	ECUV1H103KBX	S.M.CAP	50V	10nF

Ref No.	Part No.	Description		
C1712	ECUV1H104ZFX	S.M.CAP	50V	100nF
C1713	ECUV1H104ZFX	S.M.CAP	50V	100nF
C1714	ECUV1H104ZFX	S.M.CAP	50V	100nF
C1721	ECA1CM470GB	ELECT	16V	47μF
C1722	ECA1CM470GB	ELECT	16V	47μF
C1723	ECUV1H104ZFX	S.M.CAP	50V	100nF
C1724	ECUV1H104ZFX	S.M.CAP	50V	100nF
C1725	ECUV1H104ZFX	S.M.CAP	50V	100nF
C1726	ECUV1H104ZFX	S.M.CAP	50V	100nF
C1727	ECUV1H104ZFX	S.M.CAP	50V	100nF
C1728	ECUV1H104ZFX	S.M.CAP	50V	100nF
C1729	ECUV1H104ZFX	S.M.CAP	50V	100nF
C1730	ECUV1H104ZFX	S.M.CAP	50V	100nF
C1731	ECUV1H104ZFX	S.M.CAP	50V	100nF
C1732	ECUV1H104ZFX	S.M.CAP	50V	100nF
C1733	ECUV1H104ZFX	S.M.CAP	50V	100nF
C1734	ECUV1H104ZFX	S.M.CAP	50V	100nF
C1735	ECUV1H104ZFX	S.M.CAP	50V	100nF
C1736	ECUV1H104ZFX	S.M.CAP	50V	100nF
C1740	ECUV1H102KBX	S.M.CAP	50V	1nF
C2001	ECA1CM100GB	ELECT	16V	10pF
C2002	ECUV1H104ZFX	S.M.CAP	50V	100nF
C2003	ECUV1H104ZFX	S.M.CAP	50V	100nF
C2004	ECUV1H102JCX	S.M.CAP	50V	1nF
C2005	ECUV1H391JCX	S.M.CAP	50V	390pF
C2006	ECUV1H391JCX	S.M.CAP	50V	390pF
C2007	ECUV1H102JCX	S.M.CAP	50V	1nF
C2008	ECUV1H102JCX	S.M.CAP	50V	1nF
C2009	ECUV1H102JCX	S.M.CAP	50V	1nF
C2010	ECUV1H102JCX	S.M.CAP	50V	1nF
C2011	ECUV1H102JCX	S.M.CAP	50V	1nF
C2012	ECUV1H102JCX	S.M.CAP	50V	1nF
C2014	ECQM1H334J	FILM	50V	330nF
C2017	ECA1CM100GB	ELECT	16V	10pF
C2018	ECA1CM100GB	ELECT	16V	10pF
C2019	ECA1HM101GB	ELECT	50V	100pF
C2020	ECUV1H104ZFX	S.M.CAP	50V	100nF
C2021	ECUV1H104ZFX	S.M.CAP	50V	100nF
C2022	ECA1HM3R3GB	ELECT	50V	3.3μF
C2023	ECUV1H471JCX	S.M.CAP	50V	470pF
C2024	ECUV1H471JCX	S.M.CAP	50V	470pF
C2025	ECUV1H221JCX	S.M.CAP	50V	220pF
C2026	ECUV1H221JCX	S.M.CAP	50V	220pF
C2027	ECUV1H221JCX	S.M.CAP	50V	220pF
C2028	ECUV1H221JCX	S.M.CAP	50V	220pF
C2029	ECUV1H221JCX	S.M.CAP	50V	220pF
C2030	ECUV1H221JCX	S.M.CAP	50V	220pF
C2031	ECUV1H104ZFX	S.M.CAP	50V	100nF
C2032	ECA1CM100GB	ELECT	16V	10pF
C2034	ECUV1H070DCX	S.M.CAP	50V	7pF
C2035	ECUV1H560JCX	S.M.CAP	50V	56pF
C2036	ECUV1H100DCX	S.M.CAP	50V	10pF
C2037	ECUV1H220JCX	S.M.CAP	50V	22pF
C2039	ECUV1H070DCX	S.M.CAP	50V	7pF
C2040	ECUV1H560JCX	S.M.CAP	50V	56pF
C2041	ECUV1H560JCX	S.M.CAP	50V	56pF
C2042	ECUV1H104ZFX	S.M.CAP	50V	100nF
C2043	ECA1CM100GB	ELECT	16V	10pF
C2044	ECUV1H010CCX	S.M.CAP	50V	1pF
C2045	ECUV1H010CCX	S.M.CAP	50V	1pF
C2050	ECUV1H223ZFX	S.M.CAP	50V	22nF
C2051	ECUV1H223ZFX	S.M.CAP	50V	22nF
C2052	ECUV1H103ZFX	S.M.CAP	50V	10nF
C2053	ECUV1H103ZFX	S.M.CAP	50V	10nF
C2054	ECA1CM331B	ELECT	16V	330pF
C2055	ECA1CM331B	ELECT	16V	330pF
C2058	ECUV1H683ZFX	S.M.CAP	50V	68nF
C2059	ECUV1H102KBX	S.M.CAP	50V	1nF
C2060	ECUV1H102KBX	S.M.CAP	50V	1nF
C2351	ECA1CM471GB	ELECT	16V	470pF
C2352	ECA1CM471GB	ELECT	16V	470pF
C2353	ECA1HM4R7GB	ELECT	50V	4.7μF

Ref No.	Part No.	Description
D812	MTZJT−775.6B	DIODE
D813	MA700TA5	DIODE
D814	AU01ZV0	DIODE
D815	PC123FY2	DIODE
D817	D5L60F4015	DIODE
D818	TMPG10G3	DIODE
D819	ERA81004V3	DIODE
D820	MA4100	DIODE
D821	EU02AV0	DIODE
D822	MTZJT−7718C	DIODE
D845	1SS254T−77	DIODE
D846	TVSS1WBS20	DIODE
D847	ERA15−01V1	DIODE
D848	ERB32−02E	DIODE RU30LFS1
D849	FMGG26S	DIODE
D850	EU02	DIODE
D851	FMGG2CS	DIODE
D852	MTZJT−779.1C	DIODE
D853	1SS254T−77	DIODE
D854	1SS254T−77	DIODE
D855	D10SC6MRL	DIODE
D857	FML22SLF610	DIODE
D860	1SS254T−77	DIODE
D861	MTZJT−7713B	DIODE
D901	1SS254T−77	DIODE
D902	1SS254T−77	DIODE
D903	1SS254T−77	DIODE
D1051	SLR56UR3FLF	LED
D1052	AU01V0	DIODE
D1053	AU01V0	DIODE
D1054	AU01V0	DIODE
D1055	AU01V0	DIODE
D1056	AU01V0	DIODE
D1057	AU01V0	DIODE
D1102	MA4051	DIODE
D1107	MTZJT−775.6A	DIODE
D1108	1SS254T−77	DIODE
D1109	1SS254T−77	DIODE
D1113	MA4051	DIODE
D1552	RLS72TE−11	DIODE OR PMLL4148
D2005	MA723TA5	DIODE
D2006	MA723TA5	DIODE
D3101	PMLL5242B	DIODE
D3102	PMLL5242B	DIODE
D3103	PMLL5242B	DIODE
D3105	PMLL5242B	DIODE
D3107	PMLL5242B	DIODE
D3109	PMLL5242B	DIODE
D3110	PMLL5242B	DIODE
D3111	PMLL5242B	DIODE
D3112	PMLL5242B	DIODE
D3115	PMLL5242B	DIODE
D3117	PMLL5242B	DIODE
D3120	RLS72TE−11	DIODE OR PMLL4148
D3351	1SS254T−77	DIODE
D3501	MA4030	DIODE
D3801	MA4043	DIODE
D3802	MTZJT−778.2A	DIODE
D3803	ERA81004V3	DIODE
D3805	MA4091	DIODE
D3806	MA165TA5	DIODE 1SS133T−77
D3807	MA165TA5	DIODE 1SS133T−77

FUSES

F532	TR5−T1250	FUSE	⚠
F801	XBA2C50TH15	FUSE	
F845	TR5−T2000	FUSE	⚠
F846	TR5−T1250	FUSE	⚠
F8011	EYF52BC	FUSE HOLDER	
F8012	EYF52BC	FUSE HOLDER	

TERMINALS AND LINKS

JA2	ERJ6GEY0R00	S.M.CARB	0.1W	5%	0Ω
JA3	ERJ6GEY0R00	S.M.CARB	0.1W	5%	0Ω
JA5	ERJ6GEY0R00	S.M.CARB	0.1W	5%	0Ω
JA6	ERJ6GEY0R00	S.M.CARB	0.1W	5%	0Ω
JA7	ERJ6GEY0R00	S.M.CARB	0.1W	5%	0Ω
JA8	ERJ6GEY0R00	S.M.CARB	0.1W	5%	0Ω
JA9	ERJ6GEY0R00	S.M.CARB	0.1W	5%	0Ω
JK3001	TJBA039	A/V TERMINAL			
JSB3	ERJ6GEY0R00	S.M.CARB	0.1W	5%	0Ω
JSE010	ERJ6GEY0R00	S.M.CARB	0.1W	5%	0Ω
JSE011	ERJ6GEY0R00	S.M.CARB	0.1W	5%	0Ω
JSE012	ERJ6GEY0R00	S.M.CARB	0.1W	5%	0Ω
JSE015	ERJ6GEY0R00	S.M.CARB	0.1W	5%	0Ω
JSE022	ERJ6GEY0R00	S.M.CARB	0.1W	5%	0Ω
JSE023	ERJ6GEY0R00	S.M.CARB	0.1W	5%	0Ω
JSE024	ERJ6GEY0R00	S.M.CARB	0.1W	5%	0Ω
JSE025	ERJ6GEY0R00	S.M.CARB	0.1W	5%	0Ω
JSE028	ERJ6GEY0R00	S.M.CARB	0.1W	5%	0Ω
JSE03	ERJ6GEY0R00	S.M.CARB	0.1W	5%	0Ω
JSE042	ERJ6GEY0R00	S.M.CARB	0.1W	5%	0Ω
JSE050	ERJ6GEY0R00	S.M.CARB	0.1W	5%	0Ω
JSE056	ERJ6GEY0R00	S.M.CARB	0.1W	5%	0Ω
JSE057	ERJ6GEY0R00	S.M.CARB	0.1W	5%	0Ω
JSE058	ERJ6GEY0R00	S.M.CARB	0.1W	5%	0Ω
JSE062	ERJ6GEY0R00	S.M.CARB	0.1W	5%	0Ω
JSE064	ERJ6GEY0R00	S.M.CARB	0.1W	5%	0Ω
JSE07	ERJ6GEY0R00	S.M.CARB	0.1W	5%	0Ω
JSE09	ERJ6GEY0R00	S.M.CARB	0.1W	5%	0Ω
JSF001	ERJ6GEY0R00	S.M.CARB	0.1W	5%	0Ω
JSF002	ERJ6GEY0R00	S.M.CARB	0.1W	5%	0Ω
JSF004	ERJ6GEY0R00	S.M.CARB	0.1W	5%	0Ω
JSF005	ERJ6GEY0R00	S.M.CARB	0.1W	5%	0Ω
JSF015	ERJ6GEY0R00	S.M.CARB	0.1W	5%	0Ω
JSF026	ERJ6GEY0R00	S.M.CARB	0.1W	5%	0Ω
JSF038	ERJ6GEY0R00	S.M.CARB	0.1W	5%	0Ω
JSF040	ERJ6GEY0R00	S.M.CARB	0.1W	5%	0Ω
JSF041	ERJ6GEY0R00	S.M.CARB	0.1W	5%	0Ω
JSF045	ERJ6GEY0R00	S.M.CARB	0.1W	5%	0Ω
JSF046	ERJ6GEY0R00	S.M.CARB	0.1W	5%	0Ω
JSF049	ERJ6GEY0R00	S.M.CARB	0.1W	5%	0Ω
JSF050	ERJ6GEY0R00	S.M.CARB	0.1W	5%	0Ω
JSF054	ERJ6GEY0R00	S.M.CARB	0.1W	5%	0Ω
JSF056	ERJ6GEY0R00	S.M.CARB	0.1W	5%	0Ω
JSF059	ERJ6GEY0R00	S.M.CARB	0.1W	5%	0Ω
JSF061	ERJ6GEY0R00	S.M.CARB	0.1W	5%	0Ω
JSF062	ERJ6GEY0R00	S.M.CARB	0.1W	5%	0Ω
JSH004	ERJ6GEY0R00	S.M.CARB	0.1W	5%	0Ω
JSH005	ERJ6GEY0R00	S.M.CARB	0.1W	5%	0Ω
JSH01	ERJ6GEY0R00	S.M.CARB	0.1W	5%	0Ω
JSH010	ERJ6GEY0R00	S.M.CARB	0.1W	5%	0Ω
JSH02	ERJ6GEY0R00	S.M.CARB	0.1W	5%	0Ω

COILS

LC1503	ELKTR391CA	DELAY LINE
LC1507	EXCEMT103DTM	COIL
LC1508	EXCEMT103DTM	COIL
LC1509	EXCEMT103DTM	COIL
LC1510	EXCEMT103DTM	COIL
LC1601	ELKTR391CA	DELAY LINE
LC1602	ELKTR391CA	DELAY LINE
LC1603	ELKTR391CA	DELAY LINE
LC1609	ELKTR560BA	DELAY LINE
L002	TLT047K991R	COIL
L004	TLT047K991R	COIL
L005	TLT047K991R	COIL
L102	TLT056K991R	COIL

Ref No.	Part No.	Description
L103	EQV7EN203B	COIL
L105	ELESNR22MA	COIL
L107	ELESNR22MA	COIL
L108	ELESNR22MA	COIL
L109	EIL7EN015Q	COIL
L110	EQL7EN022Q	COIL
L113	EIL7EN015Q	COIL
L252	EXCELSA35T	COIL
L253	EXCELSA35T	COIL
L254	EXCELSA35T	COIL
L255	EXCELSA35T	COIL
L351	SDL5000	DELAY LINE
L352	EXCELDR25V	COIL
L353	TLT150K991R	COIL
L361	SDL5000	DELAY LINE
L362	EXCELDR25V	COIL
L363	TLT150K991R	COIL
L371	SDL5000	DELAY LINE
L372	EXCELDR25V	COIL
L373	TLT150K991R	COIL
L381	TLT220K991R	COIL
L401	EXCELDR35V	COIL
L402	EXCELDR35V	COIL
L451	EXCELDR35V	COIL
L552	EXCELSA35T	COIL
L553	EXCELSA35T	COIL
L554	EXCELDR35V	COIL
L555	EXCELDR35C	COIL
L571	ELC18B271E	COIL
L572	ELHKLB025B	COIL
L573	ELHKLB026B	COIL
L575	ELC18B271E	COIL
L601	TLT047K991R	COIL
L602	TLT047K991R	COIL
L603	TLT047K991R	COIL
L605	ERD25TC0T	CARBON 0.25W 5% 0Ω
L801	ELF18D486D	COIL
L802	ELF18D486D	COIL
L807	ELF18D856A	COIL
L808	EXCELSA35T	COIL
L809	EXCELDR35C	COIL
L810	EXCELSA39V	COIL
L811	EXCELSA39V	COIL
L812	EXCELDR35V	COIL
L813	EXCELDR35V	COIL
L817	EXCELDR35V	COIL
L845	EXCELSA35T	COIL
L847	EXCELSA35B	COIL
L848	EXCELSA35T	COIL
L850	EXCELSA35T	COIL
L851	EXCELSA35B	COIL
L852	EXCELSA35T	COIL
L853	EXCELSA35T	COIL
L854	ELEIE150KA	COIL
L856	EXCELSA35T	COIL
L861	EXCELSA35T	COIL
L862	EXCELSA35T	COIL
L1102	EXCELDR35V	COIL
L1103	EXCELDR35V	COIL
L1104	EXCELSA35T	COIL
L1105	ELEXT4R7KA	COIL
L1301	TLT330K991R	COIL
L1302	TLT100K991R	COIL
L1304	TLT100K991R	COIL
L1307	ERD25TC0T	CARBON 0.25W 5% 0Ω
L1501	EXCELDR35V	COIL
L1502	TLT033K991R	COIL
L1503	TLT033K991R	COIL
L1504	TLT033K991R	COIL
L1552	EXCELDR35V	COIL
L1553	EXCELDR35V	COIL
L1575	EXCELDR35V	COIL

Ref No.	Part No.	Description
L1576	EXCELDR35V	COIL
L1601	EXCELDR35V	COIL
L1602	EXCELDR35V	COIL
L1603	TLT100K991R	COIL
L1604	TLT100K991R	COIL
L1605	TLT100K991R	COIL
L1606	TLT100K991R	COIL
L1607	EXCELDR35V	COIL
L1641	EXCELDR35V	COIL
L1701	EXCELDR35V	COIL
L1721	EXCELDR35V	COIL
L1722	EXCELDR35V	COIL
L2001	TLT047K991R	COIL
L2002	TLT100K991R	COIL
L2003	EXCELDR35V	COIL
L2004	TLT068K991R	COIL
L2005	TLT068K991R	COIL
L2351	ELEBR6R8KA	COIL
L2361	ELEBR6R8KA	COIL
L3001	ELEBR6R8KA	COIL
L3002	ELEBR6R8KA	COIL
L3003	ELEBR470KA	COIL
L3107	EXCELDR35V	COIL
L3108	EXCELDR35V	COIL
L3109	EXCELDR35V	COIL
L3110	EXCELDR35V	COIL
L3111	EXCELDR35V	COIL
L3112	EXCELDR35V	COIL
L3113	EXCELDR35V	COIL
L3114	EXCELDR35V	COIL
L3503	EXCELDR35V	COIL
L3507	EXCELDR35V	COIL
L3509	EXCELDR35V	COIL
L3511	TLT100K991R	COIL

TRANSISTORS

Q008	BC847B	TRANSISTOR OR 2SD601ATX
Q101	BC847B	TRANSISTOR OR 2SD601ATX
Q102	BC847B	TRANSISTOR OR 2SD601ATX
Q103	BC847B	TRANSISTOR OR 2SD601ATX
Q104	BC847B	TRANSISTOR OR 2SD601ATX
Q105	BC847B	TRANSISTOR OR 2SD601ATX
Q106	BF799E6327	CHIP TRANSISTOR
Q107	BC847B	TRANSISTOR OR 2SD601ATX
Q108	BC847B	TRANSISTOR OR 2SD601ATX
Q109	BC860B	TRANSISTOR
Q251	BC847B	TRANSISTOR OR 2SD601ATX
Q252	BC847B	TRANSISTOR OR 2SD601ATX
Q401	BC847B	TRANSISTOR OR 2SD601ATX
Q502	2SC2925STA	TRANSISTOR
Q531	BC547B	TRANSISTOR
Q532	BC547B	TRANSISTOR
Q533	BC547B	TRANSISTOR
Q535	BC547B	TRANSISTOR
Q551	BC547B	TRANSISTOR
Q552	2SC5144LBMA1	TRANSISTOR
Q553	2SC1473−RN	TRANSISTOR
Q554	2SC1473−RN	TRANSISTOR
Q573	BC557B	TRANSISTOR
Q574	2SD1265AOPLB	TRANSISTOR
Q601	BC847B	TRANSISTOR OR 2SD601ATX
Q602	BC857B	TRANSISTOR OR 2SB709ATX
Q603	BC847B	TRANSISTOR OR 2SD601ATX
Q604	BC857B	TRANSISTOR OR 2SB709ATX
Q605	BC857B	TRANSISTOR OR 2SB709ATX
Q607	BC847B	TRANSISTOR OR 2SD601ATX
Q608	BC847B	TRANSISTOR OR 2SD601ATX
Q609	BC847B	TRANSISTOR OR 2SD601ATX
Q610	BC847B	TRANSISTOR OR 2SD601ATX
Q611	BC847B	TRANSISTOR OR 2SD601ATX

Ref No.	Part No.	Description
Q612	BC847B	TRANSISTOR OR 2SD601ATX
Q801	2SK1489MAT	TRANSISTOR
Q803	2SD965−R	TRANSISTOR
Q804	2SA719−TA	TRANSISTOR
Q845	2SA684R	TRANSISTOR
Q846	BC547B	TRANSISTOR
Q847	BC557B	TRANSISTOR
Q848	BC547B	TRANSISTOR
Q849	2SA1018QTA	TRANSISTOR
Q850	2SD1474PLB	TRANSISTOR
Q851	BC547B	TRANSISTOR
Q852	BC547B	TRANSISTOR
Q901	BC847B	TRANSISTOR OR 2SD601ATX
Q902	BC847B	TRANSISTOR OR 2SD601ATX
Q903	BC847B	TRANSISTOR OR 2SD601ATX
Q904	BC857B	TRANSISTOR OR 2SB709ATX
Q905	BC847B	TRANSISTOR OR 2SD601ATX
Q906	BC847B	TRANSISTOR OR 2SD601ATX
Q907	BC857B	TRANSISTOR OR 2SB709ATX
Q908	2SA1535ARLB	TRANSISTOR
Q909	2SC3944ARLB	TRANSISTOR
Q1052	BC557B	TRANSISTOR
Q1101	BC847B	TRANSISTOR OR 2SD601ATX
Q1102	BC847B	TRANSISTOR OR 2SD601ATX
Q1103	BC847B	TRANSISTOR OR 2SD601ATX
Q1108	BC847B	TRANSISTOR OR 2SD601ATX
Q1112	2SC3757QRTX	TRANSISTOR
Q1191	BC847B	TRANSISTOR OR 2SD601ATX
Q1301	BC847B	TRANSISTOR OR 2SD601ATX
Q1303	BC847B	TRANSISTOR OR 2SD601ATX
Q1501	BC847B	TRANSISTOR OR 2SD601ATX
Q1502	BC847B	TRANSISTOR OR 2SD601ATX
Q1503	BC847B	TRANSISTOR OR 2SD601ATX
Q1575	BC847B	TRANSISTOR OR 2SD601ATX
Q1642	BC847B	TRANSISTOR OR 2SD601ATX
Q1643	BC847B	TRANSISTOR OR 2SD601ATX
Q1644	BC857B	TRANSISTOR OR 2SB709ATX
Q1647	BC847B	TRANSISTOR OR 2SD601ATX
Q1648	BC857B	TRANSISTOR OR 2SB709ATX
Q1649	BC857B	TRANSISTOR OR 2SB709ATX
Q2001	BC860B	TRANSISTOR
Q2002	BC860B	TRANSISTOR
Q2003	BC860B	TRANSISTOR
Q2004	BC860B	TRANSISTOR
Q2006	BC857B	TRANSISTOR OR 2SB709ATX
Q2007	BC847B	TRANSISTOR OR 2SD601ATX
Q2351	BC547B	TRANSISTOR
Q2352	BC547B	TRANSISTOR
Q2353	BC557B	TRANSISTOR
Q2361	BC547B	TRANSISTOR
Q2362	BC547B	TRANSISTOR
Q2363	BC557B	TRANSISTOR
Q3101	BC847B	TRANSISTOR OR 2SD601ATX
Q3102	BC847B	TRANSISTOR OR 2SD601ATX
Q3105	BC847B	TRANSISTOR OR 2SD601ATX
Q3106	BC847B	TRANSISTOR OR 2SD601ATX
Q3107	BC857B	TRANSISTOR OR 2SB709ATX
Q3108	BC847B	TRANSISTOR OR 2SD601ATX
Q3113	BC847B	TRANSISTOR OR 2SD601ATX
Q3115	BC857B	TRANSISTOR OR 2SB709ATX
Q3201	BC847B	TRANSISTOR OR 2SD601ATX
Q3351	BC847B	TRANSISTOR OR 2SD601ATX
Q3352	BC857B	TRANSISTOR OR 2SB709ATX
Q3501	BC847B	TRANSISTOR OR 2SD601ATX
Q3502	BC847B	TRANSISTOR OR 2SD601ATX
Q3503	2SC3130TX	TRANSISTOR

RESISTOR

Ref No.	Part No.	Description				
RL806	TSE1885−1	RELAY				
R003	ERJ6GEYJ223	S.M.CARB	0.1W	5%	22KΩ	
R006	ERJ6GEYJ393	S.M.CARB	0.1W	5%	39KΩ	
R011	ERJ6GEYJ101	S.M.CARB	0.1W	5%	100Ω	
R012	ERJ6GEYJ101	S.M.CARB	0.1W	5%	100Ω	
R101	ERJ6GEYJ102	S.M.CARB	0.1W	5%	1KΩ	
R102	ERJ6GEYJ101	S.M.CARB	0.1W	5%	100Ω	
R103	ERJ6GEYJ103	S.M.CARB	0.1W	5%	10KΩ	
R104	ERJ6GEY0R00	S.M.CARB	0.1W	5%	0Ω	
R105	ERJ6GEYJ331	S.M.CARB	0.1W	5%	330Ω	
R106	ERJ6GEYJ680	S.M.CARB	0.1W	5%	68Ω	
R107	ERJ6GEYJ123	S.M.CARB	0.1W	5%	12KΩ	
R109	ERJ6GEYJ102	S.M.CARB	0.1W	5%	1KΩ	
R110	ERJ6GEYJ103	S.M.CARB	0.1W	5%	10KΩ	
R111	ERJ6GEYJ331	S.M.CARB	0.1W	5%	330Ω	
R113	ERJ6GEY0R00	S.M.CARB	0.1W	5%	0Ω	
R115	ERJ6GEYJ121	S.M.CARB	0.1W	5%	120Ω	
R117	ERJ6GEYJ683	S.M.CARB	0.1W	5%	68KΩ	
R118	ERJ6GEYJ151	S.M.CARB	0.1W	5%	150Ω	
R119	ERJ6GEY0R00	S.M.CARB	0.1W	5%	0Ω	
R120	ERJ6GEYJ223	S.M.CARB	0.1W	5%	22KΩ	
R121	ERJ6GEYJ331	S.M.CARB	0.1W	5%	330Ω	
R122	EVNDXAA03B24	CONTROL			20KΩ	
R123	ERJ6GEYJ104	S.M.CARB	0.1W	5%	100KΩ	
R124	ERJ6GEYJ223	S.M.CARB	0.1W	5%	22KΩ	
R125	ERJ6GEYJ101	S.M.CARB	0.1W	5%	100Ω	
R126	ERJ6GEYJ223	S.M.CARB	0.1W	5%	22KΩ	
R127	ERJ6GEYJ473	S.M.CARB	0.1W	5%	47KΩ	
R128	ERJ6GEYJ181	S.M.CARB	0.1W	5%	180Ω	
R130	ERJ6GEY0R00	S.M.CARB	0.1W	5%	0Ω	
R132	ERJ6GEYJ122	S.M.CARB	0.1W	5%	1K2Ω	
R133	ERJ6GEYJ122	S.M.CARB	0.1W	5%	1K2Ω	
R134	ERJ6GEYJ103	S.M.CARB	0.1W	5%	10KΩ	
R135	ERJ6GEYJ103	S.M.CARB	0.1W	5%	10KΩ	
R136	ERJ6GEYJ122	S.M.CARB	0.1W	5%	1K2Ω	
R137	ERJ6GEYJ104	S.M.CARB	0.1W	5%	100KΩ	
R138	ERJ6GEYJ122	S.M.CARB	0.1W	5%	1K2Ω	
R139	ERJ6GEYJ154	S.M.CARB	0.1W	5%	150KΩ	
R141	ERJ6GEYJ330	S.M.CARB	0.1W	5%	33Ω	
R142	ERJ6GEYJ271	S.M.CARB	0.1W	5%	270Ω	
R143	ERJ6GEYJ123	S.M.CARB	0.1W	5%	12KΩ	
R144	ERJ6GEYJ152	S.M.CARB	0.1W	5%	1K5Ω	
R145	ERJ6GEYJ331	S.M.CARB	0.1W	5%	330Ω	
R146	ERJ6GEYJ104	S.M.CARB	0.1W	5%	100KΩ	
R147	ERJ6GEYJ122	S.M.CARB	0.1W	5%	1K2Ω	
R148	ERJ6GEYJ183	S.M.CARB	0.1W	5%	18KΩ	
R149	ERJ6GEYJ682	S.M.CARB	0.1W	5%	6K8Ω	
R150	ERJ6GEYJ221	S.M.CARB	0.1W	5%	220Ω	
R151	ERJ6GEYJ471	S.M.CARB	0.1W	5%	470Ω	
R152	ERJ6GEYJ103	S.M.CARB	0.1W	5%	10KΩ	
R154	ERJ6GEY0R00	S.M.CARB	0.1W	5%	0Ω	
R156	ERJ6GEY0R00	S.M.CARB	0.1W	5%	0Ω	
R157	ERJ6GEYJ101	S.M.CARB	0.1W	5%	100Ω	
R159	ERJ6GEYJ153	S.M.CARB	0.1W	5%	15KΩ	
R251	ERJ6GEYJ2R2	SM.CARB	0.125W	5%	2R2Ω	
R252	ERJ6GEYJ153	S.M.CARB	0.1W	5%	15KΩ	
R253	ERJ6GEY0R00	S.M.CARB	0.1W	5%	0Ω	
R254	ERJ6GEYJ223	S.M.CARB	0.1W	5%	22KΩ	
R255	ERJ6GEYJ331	S.M.CARB	0.1W	5%	330Ω	
R256	ERJ6GEYJ104	S.M.CARB	0.1W	5%	100KΩ	
R257	ERJ6GEYJ102	S.M.CARB	0.1W	5%	1KΩ	
R258	ERJ6GEYJ471	S.M.CARB	0.1W	5%	470Ω	
R259	ERG3SJS120	METAL	3W	5%	12Ω	⚠
R260	ERJ6GEYJ2R2	SM.CARB	0.125W	5%	2R2Ω	
R261	ERJ6GEYJ153	S.M.CARB	0.1W	5%	15KΩ	
R262	ERJ6GEYJ223	S.M.CARB	0.1W	5%	22KΩ	
R263	ERJ6GEYJ331	S.M.CARB	0.1W	5%	330Ω	
R264	ERJ6GEYJ104	S.M.CARB	0.1W	5%	100KΩ	
R265	ERJ6GEYJ471	S.M.CARB	0.1W	5%	470Ω	
R266	ERJ6GEYJ102	S.M.CARB	0.1W	5%	1KΩ	
R267	ERJ6GEYJ391	S.M.CARB	0.1W	5%	390Ω	
R268	ERJ6GEYJ391	S.M.CARB	0.1W	5%	390Ω	
R269	ERJ6GEY0R00	S.M.CARB	0.1W	5%	0Ω	
R270	ERG3SJS120	METAL	3W	5%	12Ω	⚠

Ref No.	Part No.	Description				
R351	ERJ6GEYJ102	S.M.CARB	0.1W	5%	1KΩ	
R352	ERJ6GEYJ102	S.M.CARB	0.1W	5%	1KΩ	
R354	ERJ6GEYJ102	S.M.CARB	0.1W	5%	1KΩ	
R355	ERG2FJ823	METAL	2W	5%	82KΩ	⚠
R356	ERJ6GEY0R00	S.M.CARB	0.1W	5%	0Ω	
R357	ERJ6GEYJ822	S.M.CARB	0.1W	5%	8K2Ω	
R358	ERDS1TJ821	CARBON	0.5W	5%	820Ω	
R359	ERJ6GEYJ334	S.M.CARB	0.1W	5%	330KΩ	
R360	ERDS1TJ103	CARBON	0.5W	5%	10KΩ	
R361	ERJ6GEYJ102	S.M.CARB	0.1W	5%	1KΩ	
R362	ERJ6GEYJ102	S.M.CARB	0.1W	5%	1KΩ	
R364	ERJ6GEYJ102	S.M.CARB	0.1W	5%	1KΩ	
R365	ERG2FJ823	METAL	2W	5%	82KΩ	⚠
R366	ERJ6GEY0R00	S.M.CARB	0.1W	5%	0Ω	
R367	ERJ6GEYJ822	S.M.CARB	0.1W	5%	8K2Ω	
R368	ERDS1TJ821	CARBON	0.5W	5%	820Ω	
R369	ERJ6GEY0R00	S.M.CARB	0.1W	5%	0Ω	
R370	ERQ1CJP1R2	FUSIBLE	1W	5%	1R2Ω	⚠
R371	ERJ6GEYJ102	S.M.CARB	0.1W	5%	1KΩ	
R372	ERJ6GEYJ102	S.M.CARB	0.1W	5%	1KΩ	
R374	ERJ6GEYJ102	S.M.CARB	0.1W	5%	1KΩ	
R375	ERG2FJ823	METAL	2W	5%	82KΩ	⚠
R376	ERJ6GEY0R00	S.M.CARB	0.1W	5%	0Ω	
R377	ERJ6GEYJ822	S.M.CARB	0.1W	5%	8K2Ω	
R378	ERDS1TJ821	CARBON	0.5W	5%	820Ω	
R379	ERJ6GEY0R00	S.M.CARB	0.1W	5%	0Ω	
R380	ERJ6GEYJ222	S.M.CARB	0.1W	5%	2K2Ω	
R381	ERJ6GEYJ561	S.M.CARB	0.1W	5%	560Ω	
R383	ERJ6GEYJ562	S.M.CARB	0.1W	5%	5K6Ω	
R384	ERQ12HJ101	FUSIBLE	0.5W	5%	100Ω	⚠
R390	ERDS1TJ184	CARBON	0.5W	5%	180K	
R401	ERJ6GEYJ153	S.M.CARB	0.1W	5%	15KΩ	
R402	ERJ6GEYJ332	S.M.CARB	0.1W	5%	3K3Ω	
R403	ERJ6GEYJ392	S.M.CARB	0.1W	5%	3K9Ω	
R406	ERJ6GEYJ393	S.M.CARB	0.1W	5%	39KΩ	
R407	ERJ6GEYJ101	S.M.CARB	0.1W	5%	100Ω	
R408	ERJ6GEYJ101	S.M.CARB	0.1W	5%	100Ω	
R409	ERJ6GEYJ102	S.M.CARB	0.1W	5%	1KΩ	
R410	ERJ6GEYJ100	S.M.CARB	0.1W	5%	10Ω	
R411	ERJ6GEYJ123	S.M.CARB	0.1W	5%	12KΩ	
R412	ERJ6GEYJ103	S.M.CARB	0.1W	5%	10KΩ	
R451	ERJ6GEYJ302	S.M.CARB	0.1W	5%	3KΩ	
R452	ERJ6GEYJ563	S.M.CARB	0.1W	5%	56KΩ	
R453	ERG2FJ820	METAL	2W	5%	82Ω	⚠
R454	ERX12SJR82P	RESISTOR	12W	5%	R82Ω	
R455	ERX12SJR82P	RESISTOR	12W	5%	R82Ω	
R456	ERDS1TJ220	CARBON	0.5W	5%	22Ω	
R457	ERDS1TJ223	CARBON	0.5W	5%	22KΩ	
R458	ERG1SJ272	METAL	1W	5%	2K7Ω	⚠
R459	ERJ6GEYJ393	S.M.CARB	0.1W	5%	39KΩ	
R504	ERD25TJ271	CARBON	0.25W	5%	270Ω	
R505	ERG3SJS330	METAL	3W	5%	33Ω	⚠
R506	ERDS1TJ152	CARBON	0.5W	5%	1K5Ω	
R507	ERDS1TJ152	CARBON	0.5W	5%	1K5Ω	
R531	ERD25TJ103	CARBON	0.25W	5%	10KΩ	
R532	ERD25TJ103	CARBON	0.25W	5%	10KΩ	
R533	ERD25TJ683	CARBON	0.25W	5%	68KΩ	
R534	ERD25TJ473	CARBON	0.25W	5%	47KΩ	
R535	ERD25TJ472	CARBON	0.25W	5%	4K7Ω	
R536	ERD25TJ103	CARBON	0.25W	5%	10KΩ	
R539	ERD25TJ103	CARBON	0.25W	5%	10KΩ	
R540	ERD25TJ183	CARBON	0.25W	5%	18KΩ	
R541	ERD25TJ102	CARBON	0.25W	5%	1KΩ	
R542	ERD25TJ103	CARBON	0.25W	5%	10KΩ	
R543	ERD25TJ222	CARBON	0.25W	5%	2K2Ω	
R547	ERD25TJ103	CARBON	0.25W	5%	10KΩ	
R551	ERD25TJ103	CARBON	0.25W	5%	10KΩ	
R552	ERD25TJ473	CARBON	0.25W	5%	47KΩ	
R553	ERD25TJ103	CARBON	0.25W	5%	10KΩ	
R554	ERX3SJSR27H	RESISTOR	3W	5%	R27Ω	
R555	ERD25TJ223	CARBON	0.25W	5%	22KΩ	
R556	ERO50PKF2802	METAL	50W	1%	28KΩ	⚠

Ref No.	Part No.	Description				
R557	ERO25CKF1073	METAL	25W	1%	107KΩ	⚠
R558	ERO50PKF4532	METAL	50W	1%	45KΩ	⚠
R559	ERO25CKF1002	METAL	0.25W	1%	10KΩ	⚠
R560	ERD25TJ222	CARBON	0.25W	5%	2K2Ω	
R562	ERD25TJ473	CARBON	0.25W	5%	47KΩ	
R564	ERDS1TJ394	CARBON	0.5W	5%	390KΩ	
R565	ERQ14AJW2R2	FUSIBLE	14W	5%	2R2Ω	⚠
R566	ERDS1TJ183	CARBON	0.5W	5%	18KΩ	
R567	ERG2ANJ223	METAL	2W	5%	22KΩ	
R568	ERQ12HJ330	METAL	0.5W	5%	33Ω	⚠
R569	ERDS1TJ120	CARBON	0.5W	5%	12Ω	
R570	ERD25TJ103	CARBON	0.25W	5%	10KΩ	
R571	ERX3FJ2R7H	RESISTOR	3W	5%	2R7Ω	
R572	ERG3FJ821	METAL	3W	5%	820Ω	⚠
R574	ERG3FJ151	METAL	3W	5%	150Ω	⚠
R579	ERD25TJ274	CARBON	0.25W	5%	270KΩ	
R580	ERD25TJ563	CARBON	0.25W	5%	56KΩ	
R581	ERD25TJ104	CARBON	0.25W	5%	100KΩ	
R582	ERD25TJ225	CARBON	0.25W	5%	2M2Ω	
R583	ERD25TJ225	CARBON	0.25W	5%	2M2Ω	
R584	ERD25TJ152	CARBON	0.25W	5%	1K5Ω	
R585	TSF19201	FS LINK				⚠
R587	ERD25TJ222	CARBON	0.25W	5%	2K2Ω	
R588	ERD25TJ222	CARBON	0.25W	5%	2K2Ω	
R589	ERDS1TJ100	CARBON	0.5W	5%	10Ω	
R601	ERJ6GEYJ101	S.M.CARB	0.1W	5%	100Ω	
R602	ERJ6GEYJ101	S.M.CARB	0.1W	5%	100Ω	
R603	ERJ6GEYJ102	S.M.CARB	0.1W	5%	1KΩ	
R604	ERJ6GEYJ750	S.M.CARB	0.1W	5%	75Ω	
R605	ERJ6GEYJ750	S.M.CARB	0.1W	5%	75Ω	
R606	ERJ6GEYJ750	S.M.CARB	0.1W	5%	75Ω	
R609	ERJ6GEYJ153	S.M.CARB	0.1W	5%	15KΩ	
R610	ERJ6GEYJ823	S.M.CARB	0.1W	5%	82KΩ	
R612	ERJ6GEYJ392	S.M.CARB	0.1W	5%	3K9Ω	
R613	ERJ6GEYJ392	S.M.CARB	0.1W	5%	3K9Ω	
R615	ERJ6GEYJ823	S.M.CARB	0.1W	5%	82KΩ	
R616	ERJ6GEYJ101	S.M.CARB	0.1W	5%	100Ω	
R617	ERJ6GEYJ101	S.M.CARB	0.1W	5%	100Ω	
R618	ERJ6GEYJ100	S.M.CARB	0.1W	5%	10Ω	
R619	ERJ6GEY0R00	S.M.CARB	0.1W	5%	0Ω	
R620	ERJ6GEY0R00	S.M.CARB	0.1W	5%	0Ω	
R621	ERJ6GEY0R00	S.M.CARB	0.1W	5%	0Ω	
R624	ERJ6GEYJ151	S.M.CARB	0.1W	5%	150Ω	
R625	ERJ6GEYJ393	S.M.CARB	0.1W	5%	39KΩ	
R626	ERJ6GEYJ153	S.M.CARB	0.1W	5%	15KΩ	
R627	ERJ6GEYJ681	S.M.CARB	0.1W	5%	680Ω	
R628	ERJ6GEYJ151	S.M.CARB	0.1W	5%	150Ω	
R629	ERJ6GEY0R00	S.M.CARB	0.1W	5%	0Ω	
R630	ERJ6GEYJ560	S.M.CARB	0.1W	5%	56Ω	
R632	ERJ6GEYJ393	S.M.CARB	0.1W	5%	39KΩ	
R633	ERJ6GEYJ153	S.M.CARB	0.1W	5%	15KΩ	
R634	ERJ6GEYJ681	S.M.CARB	0.1W	5%	680Ω	
R635	ERJ6GEYJ151	S.M.CARB	0.1W	5%	150Ω	
R636	ERJ6GEY0R00	S.M.CARB	0.1W	5%	0Ω	
R637	ERJ6GEYJ331	S.M.CARB	0.1W	5%	330Ω	
R639	EVNDXAA03B32	CONTROL			300Ω	
R640	ERJ6GEY0R00	S.M.CARB	0.1W	5%	0Ω	
R643	ERJ6GEYJ101	S.M.CARB	0.1W	5%	100Ω	
R644	ERJ6GEYJ102	S.M.CARB	0.1W	5%	1KΩ	
R645	ERJ6GEYJ271	S.M.CARB	0.1W	5%	270Ω	
R646	ERJ6GEY0R00	S.M.CARB	0.1W	5%	0Ω	
R647	ERJ6GEYJ151	S.M.CARB	0.1W	5%	150Ω	
R648	ERJ6GEYJ150	S.M.CARB	0.1W	5%	15Ω	
R649	ERJ6GEY0R00	S.M.CARB	0.1W	5%	0Ω	
R651	ERJ6GEYJ225	SM.CARB	0.125W	5%	2M2Ω	
R652	ERJ6GEYJ103	S.M.CARB	0.1W	5%	10KΩ	
R653	ERJ6GEYJ103	S.M.CARB	0.1W	5%	10KΩ	
R654	ERJ6GEYJ103	S.M.CARB	0.1W	5%	10KΩ	
R655	ERJ6GEYJ243	SM.CARB	0.125W	5%	24KΩ	
R656	ERJ6GEYJ103	S.M.CARB	0.1W	5%	10KΩ	
R657	ERJ6GEYJ103	S.M.CARB	0.1W	5%	10KΩ	
R658	ERJ6GEYJ103	S.M.CARB	0.1W	5%	10KΩ	

Ref No.	Part No.	Description				
R659	ERJ6GEYJ102	S.M.CARB	0.1W	5%	1KΩ	
R660	ERJ6GEYJ102	S.M.CARB	0.1W	5%	1KΩ	
R661	ERJ6GEYJ102	S.M.CARB	0.1W	5%	1KΩ	
R662	ERJ6GEY0R00	S.M.CARB	0.1W	5%	0Ω	
R663	ERJ6GEY0R00	S.M.CARB	0.1W	5%	0Ω	
R664	ERC14GJ206V	SOLID	14W	5%	20MΩ	
R665	ERC14GJ206V	SOLID	14W	5%	20MΩ	
R666	ERJ6GEYJ101	S.M.CARB	0.1W	5%	100Ω	
R667	ERJ6GEYJ101	S.M.CARB	0.1W	5%	100Ω	
R668	ERJ6GEYJ101	S.M.CARB	0.1W	5%	100Ω	
R711	ERJ6GEYJ224	S.M.CARB	0.1W	5%	220KΩ	
R712	ERJ6GEYJ223	S.M.CARB	0.1W	5%	22KΩ	
R714	ERJ6GEYJ682	S.M.CARB	0.1W	5%	6K8Ω	
R715	ERJ6GEYJ222	S.M.CARB	0.1W	5%	2K2Ω	
R716	ERJ6GEY0R00	S.M.CARB	0.1W	5%	0Ω	
R717	ERJ6GEYJ153	S.M.CARB	0.1W	5%	15KΩ	
R718	ERJ6GEYJ472	S.M.CARB	0.1W	5%	4K7Ω	
R753	ERD25TJ333	CARBON	0.25W	5%	33KΩ	
R805	232266296706	THERMISTOR				
R806	ERD25TJ101	CARBON	0.25W	5%	100Ω	
R807	ERD25TJ104	CARBON	0.25W	5%	100KΩ	
R809	ERF10ZK4R7	WOUND	10W	5%	4R7Ω	⚠
R810	ERD25TJ223	CARBON	0.25W	5%	22KΩ	
R811	ERD25TJ102	CARBON	0.25W	5%	1KΩ	
R812	ERD25TJ681	CARBON	0.25W	5%	680Ω	
R814	ERD25TJ332	CARBON	0.25W	5%	3K3Ω	
R815	ERD25TJ150	CARBON	0.25W	5%	15Ω	
R816	ERDS1TJ470	CARBON	0.5W	5%	47Ω	
R818	ERD25TJ331	CARBON	0.25W	5%	330Ω	
R820	ERG3FJ223	METAL	3W	5%	22KΩ	⚠
R821	ERG3FJ223	METAL	3W	5%	22KΩ	⚠
R822	ERD25TJ391	CARBON	0.25W	5%	390Ω	
R823	ERX2SJR22	RESISTOR	2W	5%	R22Ω	
R824	ERX2SJR22	RESISTOR	2W	5%	R22Ω	
R825	ERX2SJR22	RESISTOR	2W	5%	R22Ω	
R827	ERDS1FJ100	CARBON	0.5W	5%	10Ω	
R828	ERD25TJ103	CARBON	0.25W	5%	10KΩ	
R829	ERD25TJ471	CARBON	0.25W	5%	470Ω	
R831	ERD75TAJ825	CARBON	0.75W	5%	8M2Ω	⚠
R832	ERG1SJ331	METAL	1W	5%	330Ω	⚠
R835	ERD25TJ220	CARBON	0.25W	5%	22Ω	
R836	ERD25TJ100	CARBON	0.25W	5%	10Ω	
R837	ERD25TJ153	CARBON	0.25W	5%	15KΩ	
R838	ERD25TJ102	CARBON	0.25W	5%	1KΩ	
R847	ERQ1CJP1R0	FUSIBLE	1W	5%	1R0Ω	⚠
R853	ERO25CKF1002	METAL	0.25W	1%	10KΩ	⚠
R854	ERDS1TJ153	CARBON	0.5W	5%	15KΩ	
R855	ERD25TJ472	CARBON	0.25W	5%	4K7Ω	
R856	ERD25TJ473	CARBON	0.25W	5%	47KΩ	
R858	ERO25CKF1002	METAL	0.25W	1%	10KΩ	⚠
R862	ERD25TJ472	CARBON	0.25W	5%	4K7Ω	
R863	ERG3FJ470	METAL	3W	5%	47Ω	⚠
R864	ERDS1TJ103	CARBON	0.5W	5%	10KΩ	
R865	ERG3FJ470	METAL	3W	5%	47Ω	⚠
R867	ERD25TJ102	CARBON	0.25W	5%	1KΩ	
R870	ERD25TJ101	CARBON	0.25W	5%	100Ω	
R873	ERDS1TJ2R2	CARBON	0.5W	5%	2R2Ω	
R876	ERD25TJ562	CARBON	0.25W	5%	5K6Ω	
R877	ERO25CKF1022	METAL	25W	1%	10KΩ	⚠
R878	ERO25CKF1002	METAL	0.25W	1%	10KΩ	⚠
R883	ERD25TJ103	CARBON	0.25W	5%	10KΩ	
R885	ERD25TJ103	CARBON	0.25W	5%	10KΩ	
R886	ERF10ZK4R7	WOUND	10W	5%	4R7Ω	⚠
R888	ERDS1TJ393	CARBON	0.5W	5%	39KΩ	
R889	ERD25TJ392	CARBON	0.25W	5%	3K9Ω	
R890	ERX3SJR56	RESISTOR	3W	5%	R56Ω	
R891	ERD25TJ103	CARBON	0.25W	5%	10KΩ	
R892	ERD25TJ222	CARBON	0.25W	5%	2K2Ω	
R894	ERD25TJ101	CARBON	0.25W	5%	100Ω	
R905	ERJ6GEYJ681	S.M.CARB	0.1W	5%	680Ω	
R906	ERJ6GEYJ563	S.M.CARB	0.1W	5%	56KΩ	

Ref No.	Part No.	Description				
R907	ERJ6GEYJ822	S.M.CARB	0.1W	5%	8K2Ω	
R908	ERJ6GEYJ471	S.M.CARB	0.1W	5%	470Ω	
R909	ERJ6GEYJ102	S.M.CARB	0.1W	5%	1KΩ	
R910	ERJ6GEYJ221	S.M.CARB	0.1W	5%	220Ω	
R911	ERD25TJ561	CARBON	0.25W	5%	560Ω	
R913	ERJ6GEYJ183	S.M.CARB	0.1W	5%	18KΩ	
R914	ERJ6GEYJ222	S.M.CARB	0.1W	5%	2K2Ω	
R915	ERJ6GEYJ182	S.M.CARB	0.1W	5%	1K8Ω	
R916	ERJ6GEYJ221	S.M.CARB	0.1W	5%	220Ω	
R918	ERJ6GEYJ101	S.M.CARB	0.1W	5%	100Ω	
R919	ERQ14AJW390	FUSIBLE	14W	5%	39Ω	⚠
R920	ERQ14AJW390	FUSIBLE	14W	5%	39Ω	⚠
R922	ERD25TJ683	CARBON	0.25W	5%	68KΩ	
R923	ERD25TJ683	CARBON	0.25W	5%	68KΩ	
R924	ERDS1FYJ390	CARBON	0.5W	5%	39Ω	⚠
R925	ERJ6GEY0R00	S.M.CARB	0.1W	5%	0Ω	
R926	ERJ6GEY0R00	S.M.CARB	0.1W	5%	0Ω	
R927	ERD25TJ122	CARBON	0.25W	5%	1K2Ω	
R928	ERD25TJ2R7	CARBON	0.25W	5%	2R7Ω	
R929	ERDS1FYJ221	CARBON	0.5W	5%	220Ω	
R930	ERD25TJ2R7	CARBON	0.25W	5%	2R7Ω	
R931	ERDS1FYJ390	CARBON	0.5W	5%	39Ω	⚠
R932	ERDS1FYJ101	CARBON	0.5W	5%	100Ω	⚠
R933	ERJ6GEYJ472	S.M.CARB	0.1W	5%	4K7Ω	
R934	ERJ6GEYJ222	S.M.CARB	0.1W	5%	2K2Ω	
R935	ERQ14AJW3R9	FUSIBLE	14W	5%	3R9Ω	⚠
R936	ERQ1CJP102	METAL	1W	5%	1KΩ	⚠
R937	ERQ14AJW100	METAL	0.25W	5%	10Ω	⚠
R938	ERD25TJ122	CARBON	0.25W	5%	1K2Ω	
R940	ERD25TJ3R3	CARBON	0.25W	5%	3R3Ω	
R941	ERD25TJ3R3	CARBON	0.25W	5%	3R3Ω	
R1054	ERD25TJ101	CARBON	0.25W	5%	100Ω	
R1057	ERD25TJ101	CARBON	0.25W	5%	100Ω	
R1058	ERD25TJ471	CARBON	0.25W	5%	470Ω	
R1059	ERD25TJ103	CARBON	0.25W	5%	10KΩ	
R1061	ERD25TJ103	CARBON	0.25W	5%	10KΩ	
R1062	ERD25TJ222	CARBON	0.25W	5%	2K2Ω	
R1063	ERD25TJ222	CARBON	0.25W	5%	2K2Ω	
R1064	ERD25TJ332	CARBON	0.25W	5%	3K3Ω	
R1065	ERD25TJ512	CARBON	0.25W	5%	5K1Ω	
R1066	ERD25TJ912	CARBON	0.25W	5%	9K1Ω	
R1101	ERJ6GEYJ472	S.M.CARB	0.1W	5%	4K7Ω	
R1102	ERJ6GEYJ472	S.M.CARB	0.1W	5%	4K7Ω	
R1103	ERJ6GEYJ472	S.M.CARB	0.1W	5%	4K7Ω	
R1104	ERJ6GEYJ472	S.M.CARB	0.1W	5%	4K7Ω	
R1105	ERJ6GEYJ472	S.M.CARB	0.1W	5%	4K7Ω	
R1106	ERJ6GEYJ472	S.M.CARB	0.1W	5%	4K7Ω	
R1107	ERJ6GEYJ472	S.M.CARB	0.1W	5%	4K7Ω	
R1108	ERJ6GEYJ472	S.M.CARB	0.1W	5%	4K7Ω	
R1111	ERJ6GEYJ101	S.M.CARB	0.1W	5%	100Ω	
R1112	ERJ6GEYJ101	S.M.CARB	0.1W	5%	100Ω	
R1113	ERJ6GEYJ101	S.M.CARB	0.1W	5%	100Ω	
R1116	ERJ6GEYJ101	S.M.CARB	0.1W	5%	100Ω	
R1117	ERJ6GEYJ101	S.M.CARB	0.1W	5%	100Ω	
R1118	ERJ6GEYJ101	S.M.CARB	0.1W	5%	100Ω	
R1119	ERJ6GEYJ101	S.M.CARB	0.1W	5%	100Ω	
R1120	ERJ6GEYJ101	S.M.CARB	0.1W	5%	100Ω	
R1121	ERJ6GEYJ101	S.M.CARB	0.1W	5%	100Ω	
R1122	ERJ6GEYJ101	S.M.CARB	0.1W	5%	100Ω	
R1123	ERJ6GEYJ472	S.M.CARB	0.1W	5%	4K7Ω	
R1124	ERJ6GEYJ103	S.M.CARB	0.1W	5%	10KΩ	
R1125	ERJ6GEYJ103	S.M.CARB	0.1W	5%	10KΩ	
R1126	ERJ6GEYJ101	S.M.CARB	0.1W	5%	100Ω	
R1127	ERJ6GEYJ101	S.M.CARB	0.1W	5%	100Ω	
R1128	ERJ6GEYJ100	S.M.CARB	0.1W	5%	10Ω	
R1129	ERJ6GEYJ100	S.M.CARB	0.1W	5%	10Ω	
R1133	ERJ6GEYJ103	S.M.CARB	0.1W	5%	10KΩ	
R1134	ERJ6GEYJ103	S.M.CARB	0.1W	5%	10KΩ	
R1135	ERJ6GEY0R00	S.M.CARB	0.1W	5%	0Ω	
R1136	ERJ6GEYJ221	S.M.CARB	0.1W	5%	220Ω	
R1137	ERJ6GEYJ561	S.M.CARB	0.1W	5%	560Ω	

Ref No.	Part No.	Description			
R1138	ERJ6GEYJ103	S.M.CARB	0.1W	5%	10KΩ
R1142	ERJ6GEYJ103	S.M.CARB	0.1W	5%	10KΩ
R1145	ERJ6GEYJ472	S.M.CARB	0.1W	5%	4K7Ω
R1150	ERJ6GEYJ472	S.M.CARB	0.1W	5%	4K7Ω
R1151	ERJ6GEYJ472	S.M.CARB	0.1W	5%	4K7Ω
R1152	ERJ6GEYJ472	S.M.CARB	0.1W	5%	4K7Ω
R1153	ERJ6GEYJ472	S.M.CARB	0.1W	5%	4K7Ω
R1154	ERJ6GEYJ472	S.M.CARB	0.1W	5%	4K7Ω
R1156	ERJ6GEYJ182	S.M.CARB	0.1W	5%	1K8Ω
R1163	ERJ6GEYJ152	S.M.CARB	0.1W	5%	1K5Ω
R1164	ERJ6GEYJ101	S.M.CARB	0.1W	5%	100Ω
R1169	ERJ6GEYJ102	S.M.CARB	0.1W	5%	1KΩ
R1170	ERJ6GEYJ332	S.M.CARB	0.1W	5%	3K3Ω
R1171	ERJ6GEYJ682	S.M.CARB	0.1W	5%	6K8Ω
R1172	ERJ6GEYJ561	S.M.CARB	0.1W	5%	560Ω
R1174	ERDS1TJ561	CARBON	0.5W	5%	560Ω
R1182	ERJ6GEYJ472	S.M.CARB	0.1W	5%	4K7Ω
R1183	ERJ6GEYJ472	S.M.CARB	0.1W	5%	4K7Ω
R1184	ERJ6GEYJ472	S.M.CARB	0.1W	5%	4K7Ω
R1185	ERJ6GEYJ101	S.M.CARB	0.1W	5%	100Ω
R1186	ERJ6GEYJ103	S.M.CARB	0.1W	5%	10KΩ
R1188	ERJ6GEYJ222	S.M.CARB	0.1W	5%	2K2Ω
R1190	ERJ6GEY0R00	S.M.CARB	0.1W	5%	0Ω
R1191	ERJ6GEYJ104	S.M.CARB	0.1W	5%	100KΩ
R1192	ERJ6GEYJ104	S.M.CARB	0.1W	5%	100KΩ
R1193	ERJ6GEYJ103	S.M.CARB	0.1W	5%	10KΩ
R1194	ERJ6GEYJ101	S.M.CARB	0.1W	5%	100Ω
R1301	ERJ6GEYJ102	S.M.CARB	0.1W	5%	1KΩ
R1302	ERJ6GEYJ392	S.M.CARB	0.1W	5%	3K9Ω
R1305	ERJ6GEYJ560	S.M.CARB	0.1W	5%	56Ω
R1306	ERJ6GEYJ101	S.M.CARB	0.1W	5%	100Ω
R1315	ERJ6GEYJ101	S.M.CARB	0.1W	5%	100Ω
R1317	ERJ6GEYJ181	S.M.CARB	0.1W	5%	180Ω
R1318	ERJ6GEYJ181	S.M.CARB	0.1W	5%	180Ω
R1319	ERJ6GEY0R00	S.M.CARB	0.1W	5%	0Ω
R1340	ERJ6GEYJ272	S.M.CARB	0.1W	5%	2K7Ω
R1501	ERJ6GEYJ560	S.M.CARB	0.1W	5%	56Ω
R1502	ERJ6GEYJ560	S.M.CARB	0.1W	5%	56Ω
R1504	ERJ6GEYJ121	S.M.CARB	0.1W	5%	120Ω
R1507	ERJ6GEYJ272	S.M.CARB	0.1W	5%	2K7Ω
R1508	ERJ6GEYJ121	S.M.CARB	0.1W	5%	120Ω
R1510	ERJ6GEYJ101	S.M.CARB	0.1W	5%	100Ω
R1511	ERJ6GEYJ272	S.M.CARB	0.1W	5%	2K7Ω
R1513	ERJ6GEYJ272	S.M.CARB	0.1W	5%	2K7Ω
R1515	ERJ6GEYJ102	S.M.CARB	0.1W	5%	1KΩ
R1516	ERJ6GEYJ102	S.M.CARB	0.1W	5%	1KΩ
R1517	ERJ6GEYJ102	S.M.CARB	0.1W	5%	1KΩ
R1518	ERJ6GEYJ101	S.M.CARB	0.1W	5%	100Ω
R1519	ERJ6GEYJ101	S.M.CARB	0.1W	5%	100Ω
R1520	ERJ6GEYJ101	S.M.CARB	0.1W	5%	100Ω
R1523	ERJ6GEYJ101	S.M.CARB	0.1W	5%	100Ω
R1550	ERJ6GEYJ221	S.M.CARB	0.1W	5%	220Ω
R1551	ERJ6GEYJ180	S.M.CARB	0.1W	5%	18Ω
R1552	ERJ6GEYJ560	S.M.CARB	0.1W	5%	56Ω
R1554	ERJ6GEYJ180	S.M.CARB	0.1W	5%	18Ω
R1555	ERJ6GEYJ331	S.M.CARB	0.1W	5%	330Ω
R1560	ERJ6GEYJ101	S.M.CARB	0.1W	5%	100Ω
R1561	ERJ6GEYJ101	S.M.CARB	0.1W	5%	100Ω
R1562	ERJ6GEYJ101	S.M.CARB	0.1W	5%	100Ω
R1563	ERJ6GEYJ180	S.M.CARB	0.1W	5%	18Ω
R1568	ERJ6GEYJ221	S.M.CARB	0.1W	5%	220Ω
R1570	ERJ6GEYJ331	S.M.CARB	0.1W	5%	330Ω
R1572	ERJ6GEYJ561	S.M.CARB	0.1W	5%	560Ω
R1575	ERJ6GEYJ391	S.M.CARB	0.1W	5%	390Ω
R1576	ERJ6GEYJ821	S.M.CARB	0.1W	5%	820Ω
R1577	ERJ6GEYJ750	S.M.CARB	0.1W	5%	75Ω
R1578	ERJ6GEYJ100	S.M.CARB	0.1W	5%	10Ω
R1581	ERJ6GEYJ472	S.M.CARB	0.1W	5%	4K7Ω
R1605	ERJ6GEYJ101	S.M.CARB	0.1W	5%	100Ω
R1606	ERJ6GEYJ101	S.M.CARB	0.1W	5%	100Ω
R1608	ERJ6GEYJ472	S.M.CARB	0.1W	5%	4K7Ω
R1620	ERJ6GEYJ472	S.M.CARB	0.1W	5%	4K7Ω

Ref No.	Part No.	Description			
R1621	ERJ6GEYJ101	S.M.CARB	0.1W	5%	100Ω
R1622	ERJ6GEYJ101	S.M.CARB	0.1W	5%	100Ω
R1624	ERJ6GEY0R00	S.M.CARB	0.1W	5%	0Ω
R1625	ERJ6GEYJ271	S.M.CARB	0.1W	5%	270Ω
R1626	ERJ6GEYJ391	S.M.CARB	0.1W	5%	390Ω
R1627	ERJ6GEYJ622	SM.CARB	0.125W	5%	6K2Ω
R1628	ERJ6GEYJ151	S.M.CARB	0.1W	5%	150Ω
R1629	ERJ6GEYJ201	S.M.CARB	0.1W	5%	200Ω
R1630	ERJ6GEYJ181	S.M.CARB	0.1W	5%	180Ω
R1631	ERJ6GEYJ103	S.M.CARB	0.1W	5%	10KΩ
R1632	ERJ6GEYJ133	SM.CARB	0.125W	5%	13KΩ
R1633	ERJ6GEYJ151	S.M.CARB	0.1W	5%	150Ω
R1634	ERJ6GEY0R00	S.M.CARB	0.1W	5%	0Ω
R1641	ERJ6GEYJ560	S.M.CARB	0.1W	5%	56Ω
R1643	ERJ6GEYJ102	S.M.CARB	0.1W	5%	1KΩ
R1644	ERJ6GEYJ560	S.M.CARB	0.1W	5%	56Ω
R1646	ERJ6GEYJ331	S.M.CARB	0.1W	5%	330Ω
R1647	ERJ6GEYJ151	S.M.CARB	0.1W	5%	150Ω
R1648	ERJ6GEYJ560	S.M.CARB	0.1W	5%	56Ω
R1649	ERJ6GEYJ560	S.M.CARB	0.1W	5%	56Ω
R1650	ERJ6GEYJ560	S.M.CARB	0.1W	5%	56Ω
R1652	ERJ6GEYJ102	S.M.CARB	0.1W	5%	1KΩ
R1653	ERJ6GEYJ560	S.M.CARB	0.1W	5%	56Ω
R1654	ERJ6GEYJ560	S.M.CARB	0.1W	5%	56Ω
R1656	ERJ6GEYJ102	S.M.CARB	0.1W	5%	1KΩ
R1659	ERJ6GEYJ560	S.M.CARB	0.1W	5%	56Ω
R1662	ERJ6GEYJ560	S.M.CARB	0.1W	5%	56Ω
R1666	ERJ6GEY0R00	S.M.CARB	0.1W	5%	0Ω
R1667	ERJ6GEYJ560	S.M.CARB	0.1W	5%	56Ω
R1668	ERJ6GEYJ560	S.M.CARB	0.1W	5%	56Ω
R1679	ERJ6GEYJ473	S.M.CARB	0.1W	5%	47KΩ
R1680	ERJ6GEYJ153	S.M.CARB	0.1W	5%	15KΩ
R1681	ERJ6GEY0R00	S.M.CARB	0.1W	5%	0Ω
R1682	ERJ6GEYJ151	S.M.CARB	0.1W	5%	150Ω
R1683	ERJ6GEYJ151	S.M.CARB	0.1W	5%	150Ω
R1688	ERJ6GEYJ561	S.M.CARB	0.1W	5%	560Ω
R1701	ERJ6GEYJ180	S.M.CARB	0.1W	5%	18Ω
R1703	ERJ6GEYJ101	S.M.CARB	0.1W	5%	100Ω
R1704	ERJ6GEYJ101	S.M.CARB	0.1W	5%	100Ω
R1705	ERJ6GEYJ473	S.M.CARB	0.1W	5%	47KΩ
R1706	ERJ6GEYJ473	S.M.CARB	0.1W	5%	47KΩ
R1707	ERJ6GEYJ180	S.M.CARB	0.1W	5%	18Ω
R1710	ERJ6GEYJ180	S.M.CARB	0.1W	5%	18Ω
R1713	ERJ6GEYJ472	S.M.CARB	0.1W	5%	4K7Ω
R1716	ERJ6GEY0R00	S.M.CARB	0.1W	5%	0Ω
R1724	ERJ6GEYJ561	S.M.CARB	0.1W	5%	560Ω
R1730	ERJ6GEYJ821	S.M.CARB	0.1W	5%	820Ω
R1777	ERJ6GEYJ561	S.M.CARB	0.1W	5%	560Ω
R1778	ERJ6GEYJ821	S.M.CARB	0.1W	5%	820Ω
R2001	ERJ6GEYJ473	S.M.CARB	0.1W	5%	47KΩ
R2004	ERJ6GEYJ103	S.M.CARB	0.1W	5%	10KΩ
R2005	ERJ6GEYJ101	S.M.CARB	0.1W	5%	100Ω
R2006	ERJ6GEYJ101	S.M.CARB	0.1W	5%	100Ω
R2007	ERJ6GEYJ183	S.M.CARB	0.1W	5%	18KΩ
R2008	ERJ6GEY0R00	S.M.CARB	0.1W	5%	0Ω
R2009	ERJ6GEY0R00	S.M.CARB	0.1W	5%	0Ω
R2010	ERJ6GEYJ101	S.M.CARB	0.1W	5%	100Ω
R2011	ERJ6GEYJ222	S.M.CARB	0.1W	5%	2K2Ω
R2012	ERJ6GEYJ101	S.M.CARB	0.1W	5%	100Ω
R2013	ERJ6GEYJ222	S.M.CARB	0.1W	5%	2K2Ω
R2014	ERJ6GEYJ471	S.M.CARB	0.1W	5%	470Ω
R2015	ERJ6GEYJ222	S.M.CARB	0.1W	5%	2K2Ω
R2016	ERJ6GEYJ471	S.M.CARB	0.1W	5%	470Ω
R2017	ERJ6GEYJ222	S.M.CARB	0.1W	5%	2K2Ω
R2018	ERJ6GEYJ471	S.M.CARB	0.1W	5%	470Ω
R2019	ERJ6GEYJ471	S.M.CARB	0.1W	5%	470Ω
R2020	ERJ6GEYJ562	S.M.CARB	0.1W	5%	5K6Ω
R2021	ERJ6GEYJ102	S.M.CARB	0.1W	5%	1KΩ
R2022	ERJ6GEYJ471	S.M.CARB	0.1W	5%	470Ω
R2023	ERJ6GEY0R00	S.M.CARB	0.1W	5%	0Ω
R2025	ERJ6GEYJ123	S.M.CARB	0.1W	5%	12KΩ
R2026	ERJ6GEYJ562	S.M.CARB	0.1W	5%	5K6Ω

Ref No.	Part No.	Description				
R2027	ERJ6GEYJ102	S.M.CARB	0.1W	5%	1KΩ	
R2038	ERJ6GEY0R00	S.M.CARB	0.1W	5%	0Ω	
R2039	ERJ6GEYJ471	S.M.CARB	0.1W	5%	470Ω	
R2044	ERJ6GEYJ471	S.M.CARB	0.1W	5%	470Ω	
R2045	ERJ6GEYJ471	S.M.CARB	0.1W	5%	470Ω	
R2351	ERQ14AJW100	METAL	0.25W	5%	10Ω	⚠
R2352	ERD25TJ101	CARBON	0.25W	5%	100Ω	
R2353	ERD25TJ101	CARBON	0.25W	5%	100Ω	
R2354	ERD25TJ473	CARBON	0.25W	5%	47KΩ	
R2355	ERD25TJ102	CARBON	0.25W	5%	1KΩ	
R2356	ERD25TJ102	CARBON	0.25W	5%	1KΩ	
R2357	ERD25TJ102	CARBON	0.25W	5%	1KΩ	
R2358	ERD25TJ102	CARBON	0.25W	5%	1KΩ	
R2359	ERD25TJ271	CARBON	0.25W	5%	270Ω	
R2360	ERD25TJ183	CARBON	0.25W	5%	18KΩ	
R2361	ERD25TJ100	CARBON	0.25W	5%	10Ω	
R2371	ERQ14AJW100	METAL	0.25W	5%	10Ω	⚠
R2372	ERD25TJ101	CARBON	0.25W	5%	100Ω	
R2373	ERD25TJ101	CARBON	0.25W	5%	100Ω	
R2374	ERD25TJ473	CARBON	0.25W	5%	47KΩ	
R2375	ERD25TJ102	CARBON	0.25W	5%	1KΩ	
R2376	ERD25TJ102	CARBON	0.25W	5%	1KΩ	
R2377	ERD25TJ102	CARBON	0.25W	5%	1KΩ	
R2378	ERD25TJ102	CARBON	0.25W	5%	1KΩ	
R2379	ERD25TJ271	CARBON	0.25W	5%	270Ω	
R2380	ERD25TJ183	CARBON	0.25W	5%	18KΩ	
R2381	ERD25TJ100	CARBON	0.25W	5%	10Ω	
R3006	ERJ6GEYJ750	S.M.CARB	0.1W	5%	75Ω	
R3101	ERJ6GEYJ102	S.M.CARB	0.1W	5%	1KΩ	
R3102	ERJ6GEYJ102	S.M.CARB	0.1W	5%	1KΩ	
R3107	ERJ6GEYJ104	S.M.CARB	0.1W	5%	100KΩ	
R3108	ERJ6GEYJ104	S.M.CARB	0.1W	5%	100KΩ	
R3109	ERJ6GEYJ681	S.M.CARB	0.1W	5%	680Ω	
R3110	ERJ6GEYJ681	S.M.CARB	0.1W	5%	680Ω	
R3114	ERJ6GEYJ681	S.M.CARB	0.1W	5%	680Ω	
R3115	ERJ6GEYJ104	S.M.CARB	0.1W	5%	100KΩ	
R3117	ERJ6GEYJ104	S.M.CARB	0.1W	5%	100KΩ	
R3118	ERJ6GEYJ681	S.M.CARB	0.1W	5%	680Ω	
R3126	ERJ6GEYJ102	S.M.CARB	0.1W	5%	1KΩ	
R3127	ERJ6GEYJ102	S.M.CARB	0.1W	5%	1KΩ	
R3128	ERJ6GEYJ104	S.M.CARB	0.1W	5%	100KΩ	
R3129	ERJ6GEYJ104	S.M.CARB	0.1W	5%	100KΩ	
R3130	ERJ6GEYJ681	S.M.CARB	0.1W	5%	680Ω	
R3131	ERJ6GEYJ681	S.M.CARB	0.1W	5%	680Ω	
R3132	ERD2FCVG100T	CARBON	2W	2%	10Ω	
R3133	ERJ6GEYJ101	S.M.CARB	0.1W	5%	100Ω	
R3134	ERJ6GEYJ101	S.M.CARB	0.1W	5%	100Ω	
R3135	ERJ6GEYJ101	S.M.CARB	0.1W	5%	100Ω	
R3136	ERJ6GEYJ101	S.M.CARB	0.1W	5%	100Ω	
R3137	ERJ6GEYJ750	S.M.CARB	0.1W	5%	75Ω	
R3138	ERJ6GEYJ470	S.M.CARB	0.1W	5%	47Ω	
R3139	ERJ6GEYJ101	S.M.CARB	0.1W	5%	100Ω	
R3140	ERJ6GEYJ101	S.M.CARB	0.1W	5%	100Ω	
R3141	ERJ6GEYJ101	S.M.CARB	0.1W	5%	100Ω	
R3142	ERJ6GEYJ101	S.M.CARB	0.1W	5%	100Ω	
R3143	ERJ6GEYJ333	S.M.CARB	0.1W	5%	33KΩ	
R3144	ERJ6GEYJ101	S.M.CARB	0.1W	5%	100Ω	
R3145	ERJ6GEYJ101	S.M.CARB	0.1W	5%	100Ω	
R3146	ERJ6GEYJ333	S.M.CARB	0.1W	5%	33KΩ	
R3147	ERJ6GEYJ153	S.M.CARB	0.1W	5%	15KΩ	
R3148	ERJ6GEYJ750	S.M.CARB	0.1W	5%	75Ω	
R3149	ERJ6GEYJ750	S.M.CARB	0.1W	5%	75Ω	
R3150	ERJ6GEYJ470	S.M.CARB	0.1W	5%	47Ω	
R3151	ERJ6GEYJ750	S.M.CARB	0.1W	5%	75Ω	
R3152	ERJ6GEYJ101	S.M.CARB	0.1W	5%	100Ω	
R3153	ERJ6GEYJ101	S.M.CARB	0.1W	5%	100Ω	
R3154	ERD2FCVG100T	CARBON	2W	2%	10Ω	
R3158	ERJ6GEYJ470	S.M.CARB	0.1W	5%	47Ω	
R3159	ERJ6GEYJ681	S.M.CARB	0.1W	5%	680Ω	
R3160	ERJ6GEYJ563	S.M.CARB	0.1W	5%	56KΩ	
R3161	ERJ6GEYJ121	S.M.CARB	0.1W	5%	120Ω	
R3162	ERJ6GEYJ101	S.M.CARB	0.1W	5%	100Ω	

Ref No.	Part No.	Description			
R3163	ERJ6GEYJ153	S.M.CARB	0.1W	5%	15KΩ
R3165	ERJ6GEYJ103	S.M.CARB	0.1W	5%	10KΩ
R3167	ERJ6GEYJ103	S.M.CARB	0.1W	5%	10KΩ
R3178	ERJ6GEY0R00	S.M.CARB	0.1W	5%	0Ω
R3180	ERJ6GEY0R00	S.M.CARB	0.1W	5%	0Ω
R3182	ERJ6GEY0R00	S.M.CARB	0.1W	5%	0Ω
R3184	ERJ6GEY0R00	S.M.CARB	0.1W	5%	0Ω
R3185	ERJ6GEYJ333	S.M.CARB	0.1W	5%	33KΩ
R3186	ERJ6GEYJ101	S.M.CARB	0.1W	5%	100Ω
R3187	ERJ6GEYJ333	S.M.CARB	0.1W	5%	33KΩ
R3188	ERJ6GEYJ101	S.M.CARB	0.1W	5%	100Ω
R3192	ERJ6GEY0R00	S.M.CARB	0.1W	5%	0Ω
R3193	ERJ6GEY0R00	S.M.CARB	0.1W	5%	0Ω
R3194	ERJ6GEYJ750	S.M.CARB	0.1W	5%	75Ω
R3195	ERJ6GEYJ750	S.M.CARB	0.1W	5%	75Ω
R3196	ERJ6GEYJ470	S.M.CARB	0.1W	5%	47Ω
R3197	ERD2FCVG100T	CARBON	2W	2%	10Ω
R3198	ERJ6GEYJ470	S.M.CARB	0.1W	5%	47Ω
R3199	ERJ6GEYJ470	S.M.CARB	0.1W	5%	47Ω
R3200	ERJ6GEYJ104	S.M.CARB	0.1W	5%	100KΩ
R3201	ERJ6GEYJ332	S.M.CARB	0.1W	5%	3K3Ω
R3202	ERJ6GEYJ332	S.M.CARB	0.1W	5%	3K3Ω
R3205	ERJ6GEYJ104	S.M.CARB	0.1W	5%	100KΩ
R3206	ERJ6GEYJ104	S.M.CARB	0.1W	5%	100KΩ
R3207	ERJ6GEYJ104	S.M.CARB	0.1W	5%	100KΩ
R3208	ERJ6GEYJ101	S.M.CARB	0.1W	5%	100Ω
R3209	ERJ6GEYJ101	S.M.CARB	0.1W	5%	100Ω
R3210	ERJ6GEYJ152	S.M.CARB	0.1W	5%	1K5Ω
R3211	ERJ6GEYJ152	S.M.CARB	0.1W	5%	1K5Ω
R3212	ERJ6GEYJ123	S.M.CARB	0.1W	5%	12KΩ
R3213	ERJ6GEYJ101	S.M.CARB	0.1W	5%	100Ω
R3214	ERJ6GEYJ153	S.M.CARB	0.1W	5%	15KΩ
R3215	ERD2FCVG100T	CARBON	2W	2%	10Ω
R3216	ERJ6GEYJ680	S.M.CARB	0.1W	5%	68Ω
R3217	ERJ6GEYJ102	S.M.CARB	0.1W	5%	1KΩ
R3218	ERJ6GEYJ750	S.M.CARB	0.1W	5%	75Ω
R3226	ERJ6GEYJ153	S.M.CARB	0.1W	5%	15KΩ
R3227	ERJ6GEY0R00	S.M.CARB	0.1W	5%	0Ω
R3228	ERJ6GEYJ680	S.M.CARB	0.1W	5%	68Ω
R3229	ERJ6GEYJ101	S.M.CARB	0.1W	5%	100Ω
R3230	ERJ6GEYJ102	S.M.CARB	0.1W	5%	1KΩ
R3231	ERD2FCVG100T	CARBON	2W	2%	10Ω
R3232	ERJ6GEYJ272	S.M.CARB	0.1W	5%	2K7Ω
R3233	ERJ6GEYJ331	S.M.CARB	0.1W	5%	330Ω
R3236	ERJ6GEYJ103	S.M.CARB	0.1W	5%	10KΩ
R3237	ERJ6GEYJ103	S.M.CARB	0.1W	5%	10KΩ
R3238	ERJ6GEYJ153	S.M.CARB	0.1W	5%	15KΩ
R3239	ERJ6GEYJ153	S.M.CARB	0.1W	5%	15KΩ
R3240	ERJ6GEYJ104	S.M.CARB	0.1W	5%	100KΩ
R3351	ERJ6GEYJ101	S.M.CARB	0.1W	5%	100Ω
R3352	ERJ6GEYJ472	S.M.CARB	0.1W	5%	4K7Ω
R3353	ERJ6GEYJ474	S.M.CARB	0.1W	5%	470KΩ
R3354	ERJ6GEYJ102	S.M.CARB	0.1W	5%	1KΩ
R3355	ERJ6GEYJ391	S.M.CARB	0.1W	5%	390Ω
R3501	ERJ6GEYJ100	S.M.CARB	0.1W	5%	10Ω
R3502	ERJ6GEY0R00	S.M.CARB	0.1W	5%	0Ω
R3503	ERJ6GEYJ471	S.M.CARB	0.1W	5%	470Ω
R3505	ERJ6GEYJ100	S.M.CARB	0.1W	5%	10Ω
R3506	ERJ6GEYJ100	S.M.CARB	0.1W	5%	10Ω
R3507	ERJ6GEYJ472	S.M.CARB	0.1W	5%	4K7Ω
R3508	ERJ6GEYJ151	S.M.CARB	0.1W	5%	150Ω
R3509	ERJ6GEYJ102	S.M.CARB	0.1W	5%	1KΩ
R3513	ERJ6GEYJ471	S.M.CARB	0.1W	5%	470Ω
R3514	ERJ6GEYJ471	S.M.CARB	0.1W	5%	470Ω
R3515	ERJ6GEYJ471	S.M.CARB	0.1W	5%	470Ω
R3516	ERJ6GEYJ472	S.M.CARB	0.1W	5%	4K7Ω
R3517	ERJ6GEYJ102	S.M.CARB	0.1W	5%	1KΩ
R3518	ERJ6GEY0R00	S.M.CARB	0.1W	5%	0Ω
R3520	ERJ6GEYJ221	S.M.CARB	0.1W	5%	220Ω
R3521	ERJ6GEY0R00	S.M.CARB	0.1W	5%	0Ω
R3522	ERJ6GEY0R00	S.M.CARB	0.1W	5%	0Ω
R3523	ERJ6GEY0R00	S.M.CARB	0.1W	5%	0Ω

Ref No.	Part No.	Description				
R3526	ERD25TC0T	CARBON	0.25W	5%	0Ω	
R3531	ERJ6GEYJ221	S.M.CARB	0.1W	5%	220Ω	
R3532	ERJ6GEYJ391	S.M.CARB	0.1W	5%	390Ω	
R3534	ERD25TJ181	CARBON	0.25W	5%	180Ω	
R3536	ERJ6GEY0R00	S.M.CARB	0.1W	5%	0Ω	
R3539	ERJ6GEY0R00	S.M.CARB	0.1W	5%	0Ω	
R3802	ERG3FJ100	METAL	3W	5%	10Ω	⚠
R3803	ERJ6GEYJ221	S.M.CARB	0.1W	5%	220Ω	
R3804	ERJ6GEYJ101	S.M.CARB	0.1W	5%	100Ω	

SWITCHES

S801	ESB91232A	SWITCH	⚠
S1051	EVQ23405R	SWITCH	
S1052	EVQ23405R	SWITCH	
S1053	EVQ23405R	SWITCH	
S1054	EVQ23405R	SWITCH	
S1055	EVQ23405R	SWITCH	

Ref No.	Part No.	Description	

TRANSFORMERS

T501	TLHA003	TRANSFORMER	
T551	ZTFH65013A	F.B.T.	⚠
T801	ETP35KAN615U	TRANSFORMER	⚠
T802	ETS49AH137ND	TRANSFORMER	
T803	ETQ19K55AY	TRANSFORMER	

FILTERS

X101	EFCT6504BF	FILTER
X102	EFCT5M7MW3	FILTER
X103	EFCT6R0MW5	FILTER
X104	K3953−M100	SAW FILTER
X105	L9454M	SAW FILTER
X106	EFCV3195T6	CERAMIC FILTER
X107	EFCT7004BF	CERAMIC FILTER
X109	EFCV4045T4	CERAMIC FILTER
X601	TSSA024	CRYSTAL
X602	TSSA025	CRYSTAL
X1101	TAF10020	CRYSTAL
X1551	TSSA009	CRYSTAL
X2001	4730007158	CRYSTAL
X3501	TSSA009	CRYSTAL

DIFFERENCES FOR MODEL TX−28XD70C

Ref No.	Part No.	Description
MISCELLANEOUS COMPONENTS		
10)	TBX8E040	POWER BUTTON BLACK
11)	TKP8E1175	LEFT PANEL BLACK
12)	TKP8E1172	TOP PANEL BLACK
26)	TKP8E1200	RIGHT PANEL BLACK
27)	TKP8E1170	DOOR LID BLACK

DIFFERENCES FOR MODEL TX−28XD70C/A

Ref No.	Part No.	Description
MISCELLANEOUS COMPONENTS		
10)	TBX8E045	POWER BUTTON DARK WOOD
11)	TKP8E1184	LEFT PANEL DARK WOOD
12)	TKP8E1182	TOP PANEL DARK WOOD
26)	TKP8E1204	RIGHT PANEL DARK WOOD
27)	TKP8E1180	DOOR LID DARK WOOD

DIFFERENCES FOR MODEL TX−28XD70C/B

Ref No.	Part No.	Description
MISCELLANEOUS COMPONENTS		
10)	TBX8E046	POWER BUTTON LIGHT WOOD
11)	TKP8E1185	LEFT PANEL LIGHT WOOD
12)	TKP8E1183	TOP PANEL LIGHT WOOD
26)	TKP8E1189	RIGHT PANEL LIGHT WOOD
27)	TKP8E1181	DOOR LID LIGHT WOOD

SCHEMATIC DIAGRAM FOR MODELS
TX−28XD70C
(Euro−3H Chassis)

IMPORTANT SAFETY NOTICE

Components identified by ⚠ mark have special characteristics important for safety. When replacing any of these components, use only manufacturer's specified parts.

Notes

1. RESISTOR
   All resistors are carbon ¼W resistor, unless marked as follows:
   Unit of resistance is OHM (Ω) (K=1,000, M=1,000,000).

2. CAPACITORS
   All capacitors are ceramic 50V, unless marked as follows:
   Unit of capacitance is μF, unless otherwise stated.

3. COIL
   Unit of inductance is μH, unless otherwise stated.
4. Components marked 'L' on the schematic diagram shows leadless parts.
5. TEST POINT
   : Test Point position

6. EARTH SYMBOL
   : Chassis Earth (Cold) :Line Earth (Hot)

7. VOLTAGE MEASUREMENT
   Voltage is measured by a DC voltmeter.
   Measurement conditions are as follows:

Power source	AC 220V−240V, 50Hz
Receiving Signal	Colour Bar signal (RF)
All customer controls	Maximum position

8. : Indicates the Video signal path
   : Indicates the Audio signal path
   : Indicates the Vertical/Horizontal signal path
9. This schematic diagram is the latest at the time of printing and is subject to change without notice.

Remarks

1. The Power Circuit contains a circuit area which uses a separate power supply to isolate the earth connection. The circuit is defined by HOT and COLD indications in the schematic diagram. All circuits, except the Power Circuit, are COLD. Take the following precautions:

Precautions

a. Do not touch the hot part, or the hot and cold parts at the same time, as you are liable to a shock hazard.
b. Do not short−circuit the hot and cold circuits as electrical components may be damaged.
c. Do not connect an instrument, such as an oscilloscope, to the hot and cold circuits simultaneously, as this may cause fuse failure. Connect the earth of the instruments to the earth connection of the circuit being measured.
d. Make sure to disconnect the power plug before removing the chassis.

ZEICHENERKLÄRUNG FÜR MODELL
TX−28XD70C
(Euro−3H Chassis)

WICHTIGER SICHERHEITSHINWEIS

Teile, die mit einen Hinweis ⚠ gekennzeichnet sind, sind wichtig für die Sicherheit. Sollte ein Auswechseln erforderlich sein, sind unbedingt Originalteile einzusetzen.

Anmerkung

1. WIDERSTANDE
   Alle ¼Watt Widerstände sind Kohlewiderstände, Abweichungen sind folgt gekennzeichnet.
   Die Maßeinheit ist OHM (Ω) (K=1,000 M=1,000,000)

2. KONDENSATOREN
   Alle Kondensatoren sind Keramikausfürungen Spannungsfestigkeit 50V. Abweichungen sind wie folgt gekennzeichnet.
   Die Maßeinheit ist μF, wenne keine andersen Bezeichnungen gennant sind

3. SPULEN
   Die Maßeinheit ist μH,Abweichungen sind gekennzeichnet.
4. Mit 'L' gekennzeichnete Teile sind ohne Anschlußdrähte.
5. TESTPUNKE
   : Kennzeichnung der Testpunktpositio

6. MASSE SYMBOL
   :Erdung am Chassis :Erdung an Masse−Leitung
7. SPANNUNGSMESSUNG
   Spannungsmessungen sind mit einem DC−Voltmeter durchzuführen. Die Meßbedingungen sind folgende:

Netzspannung	AC 220V−240V 50Hz
Wiedregabe Signal	Farbbalken−Testbild
Alle übrigen Einstellungen für Benutzer	Sollangaben

8. :Videosignalweg
   :Audiosignalweg
   :Signalweg für Hor/Vert. Synchronsignale
9. Anderungen im Laufe der Fertigung sind möglich.

Bemerkungen

1. Das Schaltnetzteil enthält Bereiche, die direkt mit dem Netz verbunden sind. Diese Bereiche sind im Schalplan mit HOT gekennzeichnet. Alle anderen Schaltungen sin mit COLD gekennzeichnet und Haben keine direkte Verbindung mit dem netz.

Für den netzverbundenen Bereich (HOT) sind folgende Vorsichtsmassregein zu beachten:

a. Weder die Leitungen im heißen noch Leitungen im heißen und im kalten Bereich gleichzeitig berühren. Es besteht die Gefahr eines elektrischen Schlages.
b. Keinesfalls die Leitungen im heißen Bereich mit denen im kalten Bereich verbinden oder kurzschliessen. Dies kann zur Zerstörung von Bauteilen oder Sicherungen führen. Außerdem ist die elektrische Betriebssicherheit des Gerätes nicht mehr gegeben.
c. Keine Messinstrumente gleichzeitig an Leitungen im heissen und kalten Bereich anschliessen. Sicherungen könnten zerstört werden. Die Erde des Messinstrumentes immer mit der des zu prüfenden Schaltkreises verbinden.
d. Vor Ausbau des Chassis, Stecker aus der Netzsteckdose ziehen.

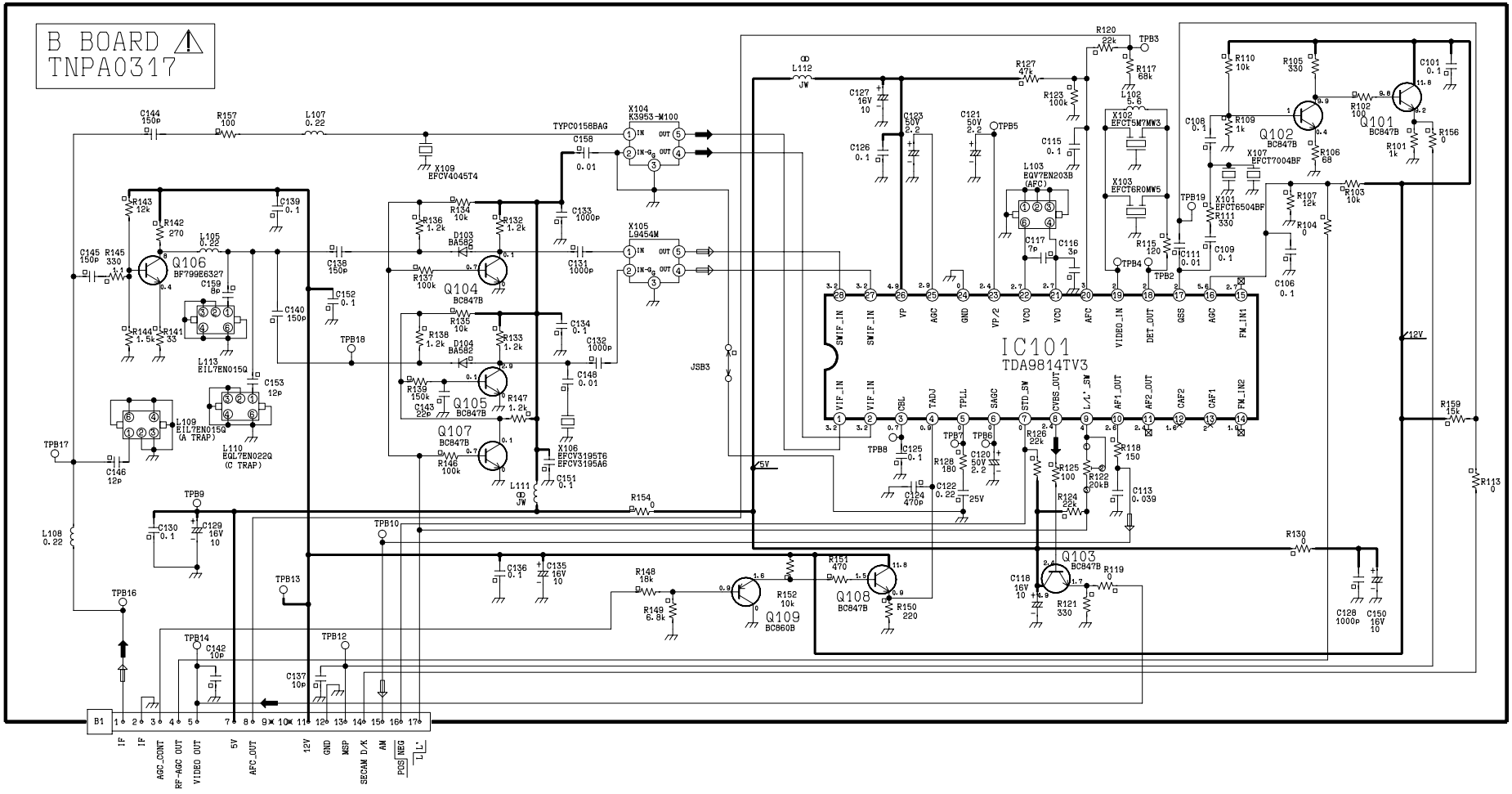
B BOARD
TNPA0317
IC101
TDA9814TV3
Q101
BC847B
Q102
BC847B
Q103
BC847B
Q104
BC847B
Q105
BC847B
Q106
BF799E6327
Q107
BC847B
Q108
BC847B
Q109
BC860B
X104
K3953-M100
X105
L9454M
X106
EFCV3195T6
EFCV3195A6
X109
EFCV4045T4
X101
EFCT6504BF
X102
EFCT5M7MW3
X103
EFCT6ROMW5
X107
EFCT7004BF
L103
EQY7EN203B
(AFC)
L109
EIL7EN015Q
(A TRAP)
L110
EQL7EN022Q
(C TRAP)
L113
EIL7EN015Q
TYPC0158BAG
JSB3
12V
5V
B1
IF
IF
AGC_CONT
RF-AGC OUT
VIDEO OUT
AFC_OUT
12V
GND
MSP
SECAM D/K
AM
POS
NEG
L'

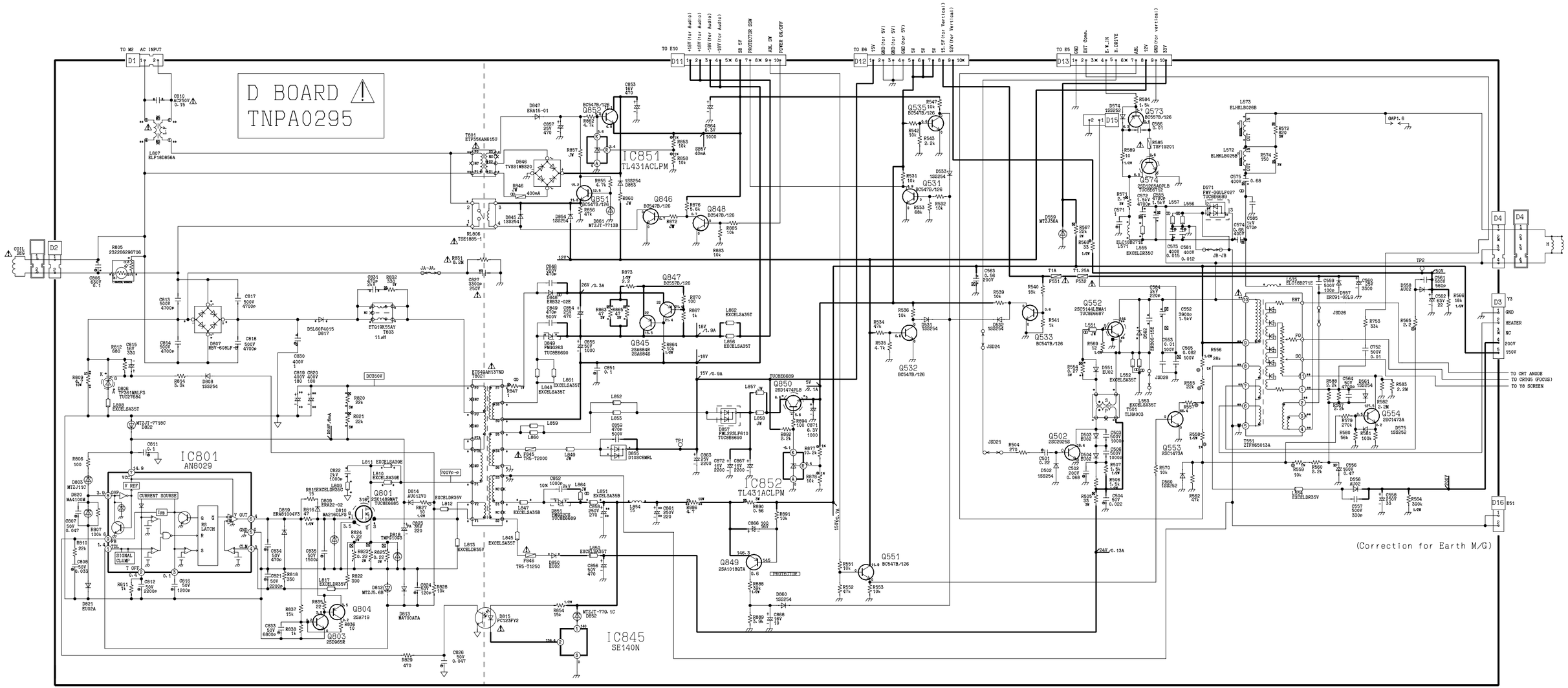
D BOARD
TNPA0295
TO M2 AC INPUT
IC801
AN8029
IC851
TL431ACLPM
IC852
TL431ACLPM
IC845
SE140N
Q801
2SK1469MAT
Q804
2SA719
Q803
2SD965R
Q851
2SA684B
2SA684S
Q845
2SA684B
2SA684S
Q847
BC557B/126
Q852
BC547B/126
Q853
BC547B/126
Q846
BC547B/126
Q848
BC547B/126
Q535
BC547B/126
Q531
BC547B/126
Q532
BC547B/126
Q533
BC547B/126
Q573
BC557B/126
Q574
2SD1265AOPLB
Q552
2SC5144LBMA1
Q502
2SD965B
Q553
2SC1473A
Q554
2SC1473A
Q850
2SD1474FLB
Q849
2SA1018GTA
Q551
BC547B/126
TO E10
TO E6
TO E5
TO CRT ANODE
TO CRTDS (FOCUS)
TO Y8 SCREEN
(Correction for Earth M/G)

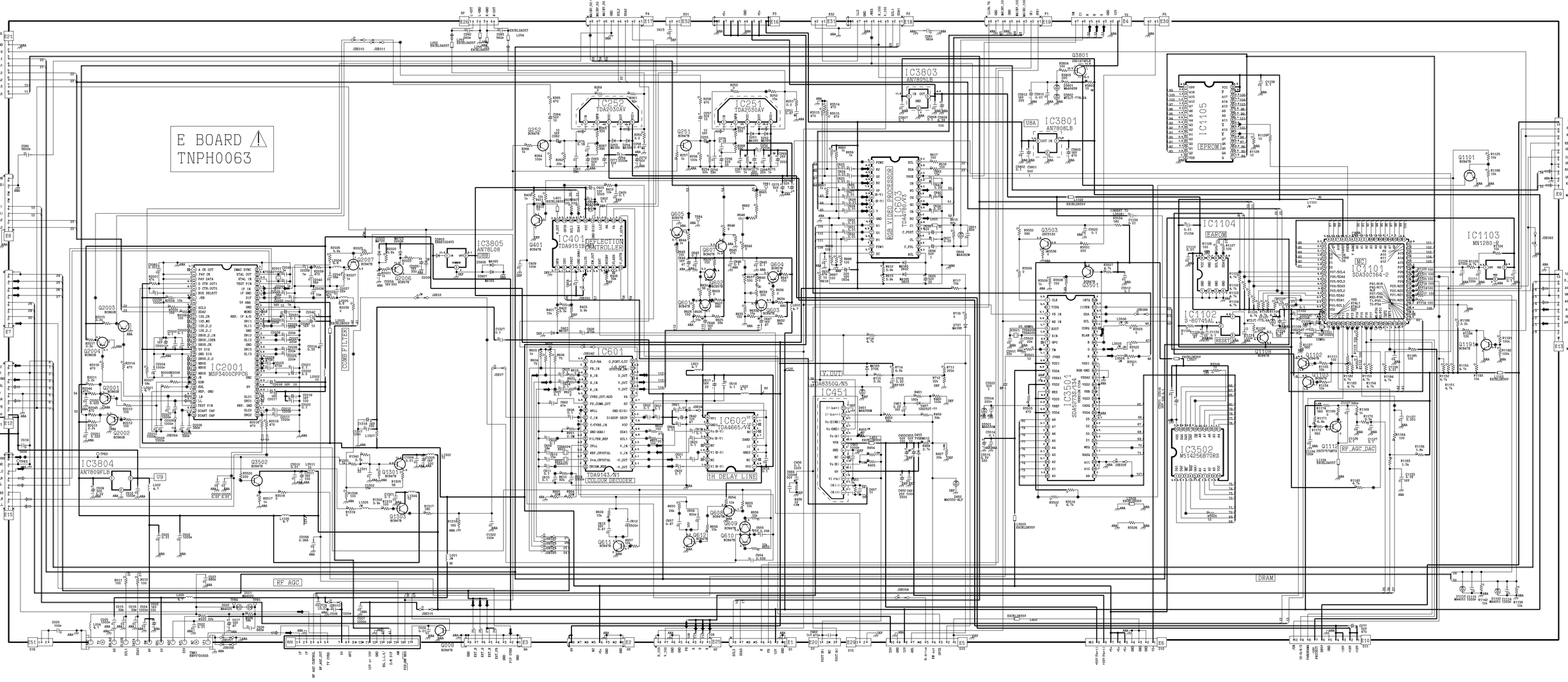
E BOARD
TNPH0063
IC2001
MSP3400CPPC6
IC3804
AN7809FLB
IC3805
AN78L08
IC401
DEFLECTION CONTROLLER
TDA9151B
IC252
TDA2030AV
IC251
TDA2030AV
IC3803
AN7805LB
IC3801
AN7808LB
RGB VIDEO PROCESSOR
TDA4780/V3
IC601
TDA9143/N1
(COLOUR DECODER)
IC602
TDA4665/V2
4H DELAY LINE
IC451
TDA8350Q/N5
IC3501
SDA9270X-3/N4
IC1105
(EPROM)
IC1104
(EAROM)
IC1101
SDA30C164-2
IC1102
S-80745AL
IC1103
MN1280
IC3502
M514256B70RS
COMB FILTER
RF AGC
DRAM
RF_AGC_DAC
RESET
Y OUT

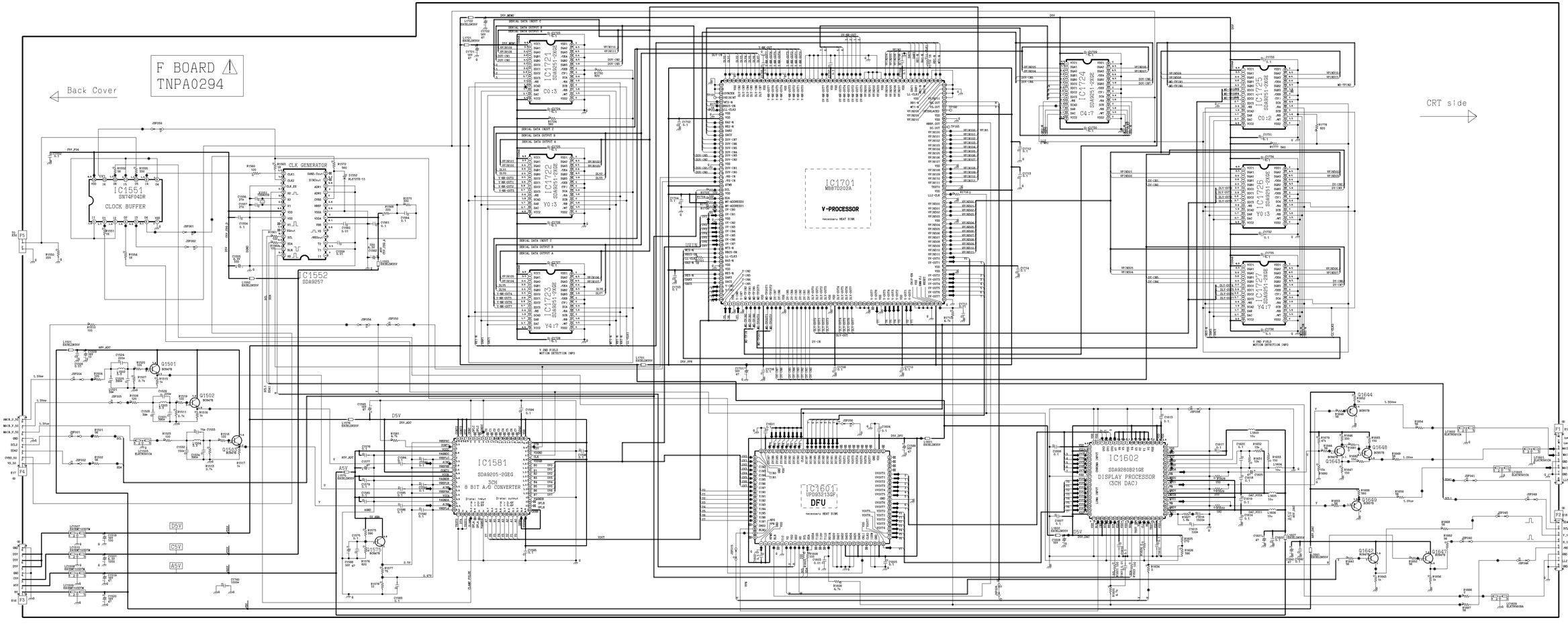
F BOARD ⚠
TNPA0294
Back Cover
CRT side
IC1551
SN74F04DR
CLOCK BUFFER
IC1552
SDA9257
CLK GENERATOR
IC1721
SDA9251-2XGE
C0:3
IC1722
SDA9251-2XGE
Y0:3
IC1723
SDA9251-2XGE
Y4:7
IC1701
MB87D202A
V-PROCESSOR
IC1724
SDA9251-2XGE
C4:7
IC1725
SDA9251-2XGE
C0:2
IC1726
SDA9251-2XGE
Y0:3
IC1727
SDA9251-2XGE
Y4:7
IC1581
SDA9205-2GEG
3CH
8 BIT A/D CONVERTER
IC1601
UPD93213GF
DFU
IC1602
SDA9280B21GE
DISPLAY PROCESSOR
(3CH DAC)
Q1501
Q1502
Q1503
Q1579
Q1642
Q1643
Q1644
Q1647
Q1648
Q1649
D5V
C5V
A5V
F5
F4
F3
F1
F2

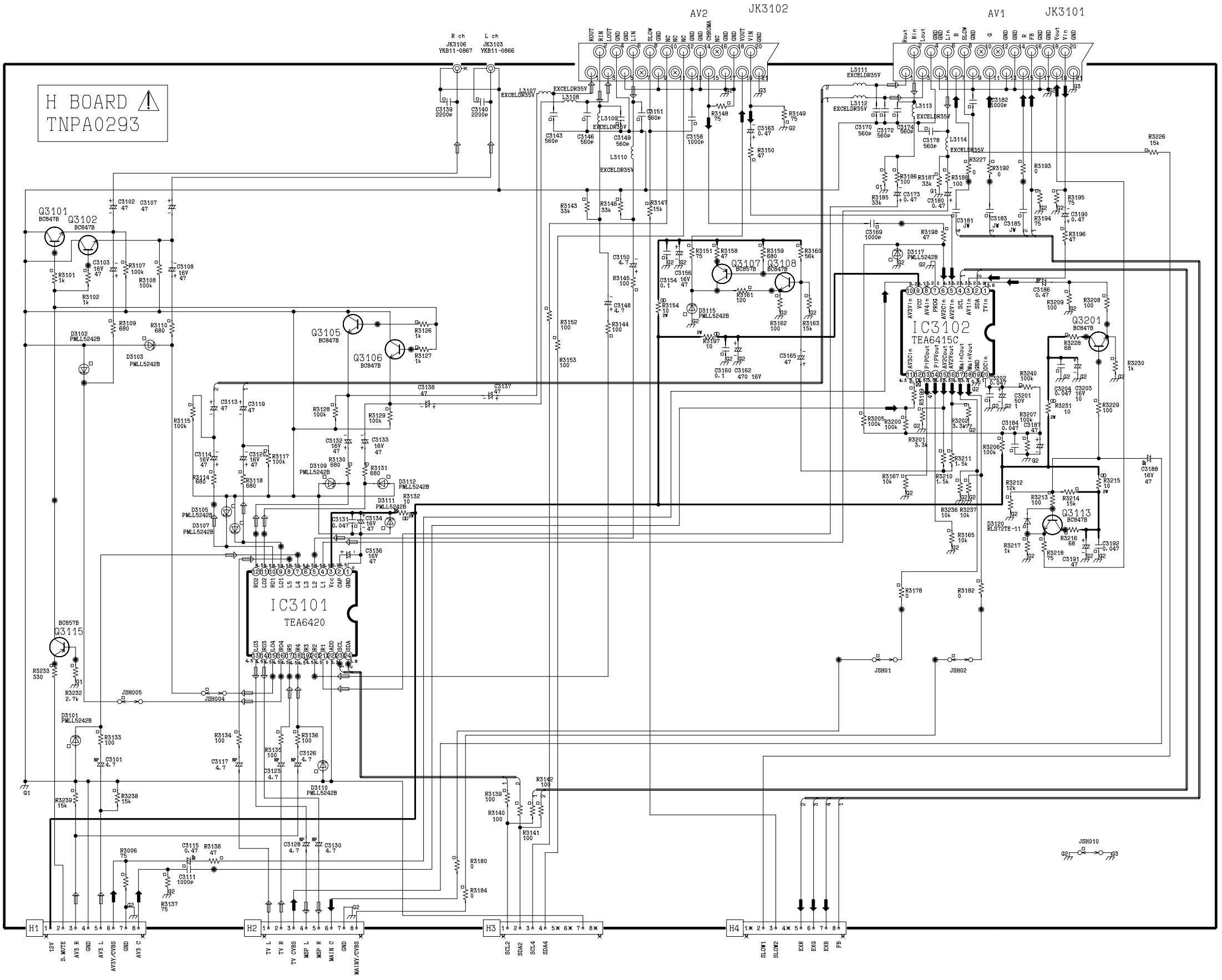
H BOARD
TNPA0293
AV2
JK3102
AV1
JK3101
R ch
JK3106
YKB11-0867
L ch
JK3103
YKB11-0866
IC3101
TEA6420
IC3102
TEA6415C
Q3101
BC847B
Q3102
BC847B
Q3105
BC847B
Q3106
BC847B
Q3107
BC857B
Q3108
BC847B
Q3201
BC847B
Q3113
BC847B
Q3115
BC857B
D3120
RLS72TE-11
JSH01
JSH02
JSH004
JSH005
JSH010
H1
12V
S.MUTE
AV3 R
GND
AV3 L
AV3Y/CVBS
GND
AV3 C
H2
TV L
TV R
TV CVBS
MSP L
MSP R
MAIN C
GND
MAINY/CVBS
H3
SCL2
SDA2
SCL4
SDA4
H4
SLOW1
SLOW2
EXR
EXG
EXB
FB

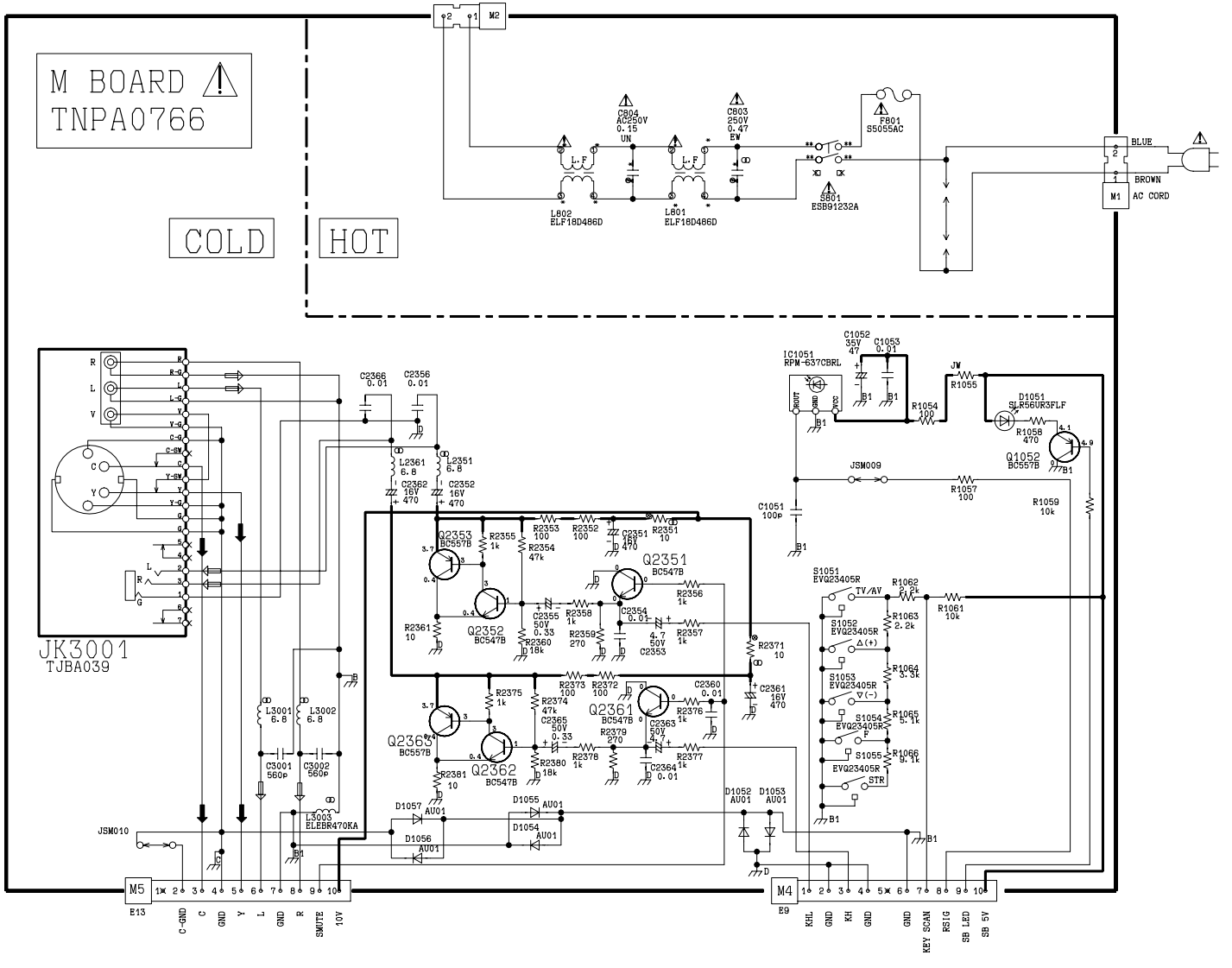
M BOARD
TNPA0766
COLD
HOT
M2
C804
AC250V
0.15
UN
C803
250V
0.47
EW
F801
S5055AC
S801
ESB91232A
L802
ELF18D486D
L801
ELF18D486D
BLUE
BROWN
M1
AC CORD
JK3001
TJBA039
C2366
0.01
C2356
0.01
L2361
6.8
L2351
6.8
C2362
16V
470
C2352
16V
470
Q2353
BC557B
R2355
1k
R2353
100
R2352
100
C2351
16V
470
R2351
10
Q2351
BC547B
R2356
1k
Q2352
BC547B
R2361
10
R2358
1k
C2355
50V
0.33
R2360
18k
R2359
270
C2354
0.01
4.7
50V
C2353
R2357
1k
R2371
10
L3001
6.8
L3002
6.8
C3001
560p
C3002
560p
L3003
ELEBR470KA
Q2363
BC557B
R2375
1k
R2374
47k
C2365
50V
0.33
R2373
100
R2372
100
Q2361
BC547B
C2360
0.01
R2376
1k
C2363
50V
4.7
R2379
270
C2361
16V
470
Q2362
BC547B
R2378
1k
R2380
18k
R2377
1k
C2364
0.01
R2381
10
D1057
AU01
D1056
AU01
D1055
AU01
D1054
AU01
D1052
AU01
D1053
AU01
JSM010
M5
E13
C-GND
C
GND
Y
L
GND
R
SMUTE
10V
IC1051
RPM-637CBRL
VOUT
GND
VCC
C1052
35V
47
C1053
0.01
R1054
100
JW
R1055
D1051
SLR56UR3FLF
R1056
470
Q1052
BC557B
JSM009
R1057
100
C1051
100p
R1059
10k
S1051
EVQ23405R
TV/AV
R1062
2.2k
R1061
10k
S1052
EVQ23405R
R1063
2.2k
S1053
EVQ23405R
R1064
3.3k
S1054
EVQ23405R
R1065
5.1k
S1055
EVQ23405R
R1066
9.1k
STR
M4
E9
KHL
GND
KH
GND
GND
KEY SCAN
RSIG
SB LED
SB 5V

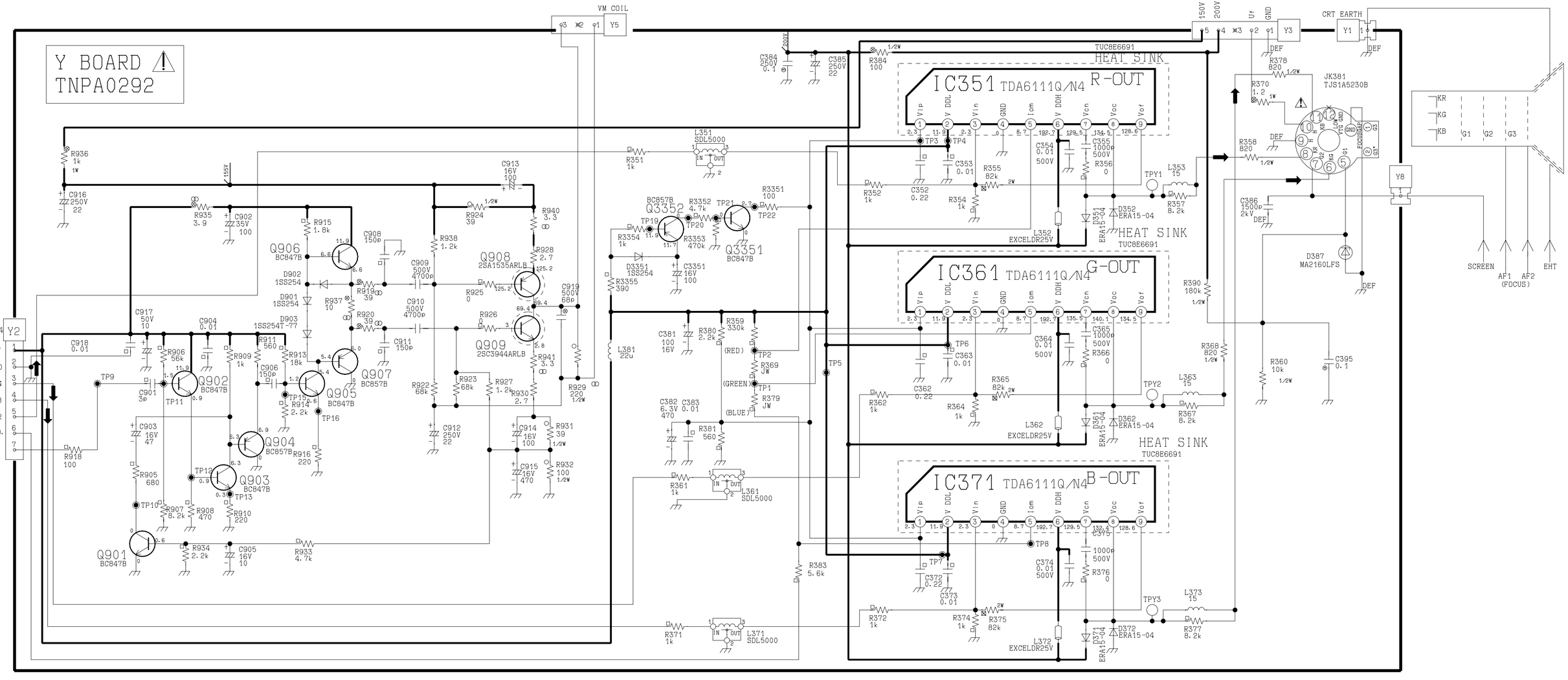
Y BOARD
TNPA0292
VM COIL
Y5
Y2
12V
GND
G
B
R
C.O.
E4
IC351 TDA6111Q/N4 R-OUT
IC361 TDA6111Q/N4 G-OUT
IC371 TDA6111Q/N4 B-OUT
HEAT SINK
TUC8E6691
JK381
TJS1A5230B
CRT EARTH
Y1
Y3
Y8
SCREEN
AF1
(FOCUS)
AF2
EHT
Q901
BC847B
Q902
BC847B
Q903
BC847B
Q904
BC857B
Q905
BC847B
Q906
BC847B
Q907
BC857B
Q908
2SA1535ARLB
Q909
2SC3944ARLB
Q3351
BC847B
Q3352
BC857B
L351
SDL5000
L361
SDL5000
L371
SDL5000
L352
EXCELDR25V
L362
EXCELDR25V
L372
EXCELDR25V
D387
MA2160LFS
D351
ERA15-04
D352
ERA15-04
D361
ERA15-04
D362
ERA15-04
D371
ERA15-04
D372
ERA15-04

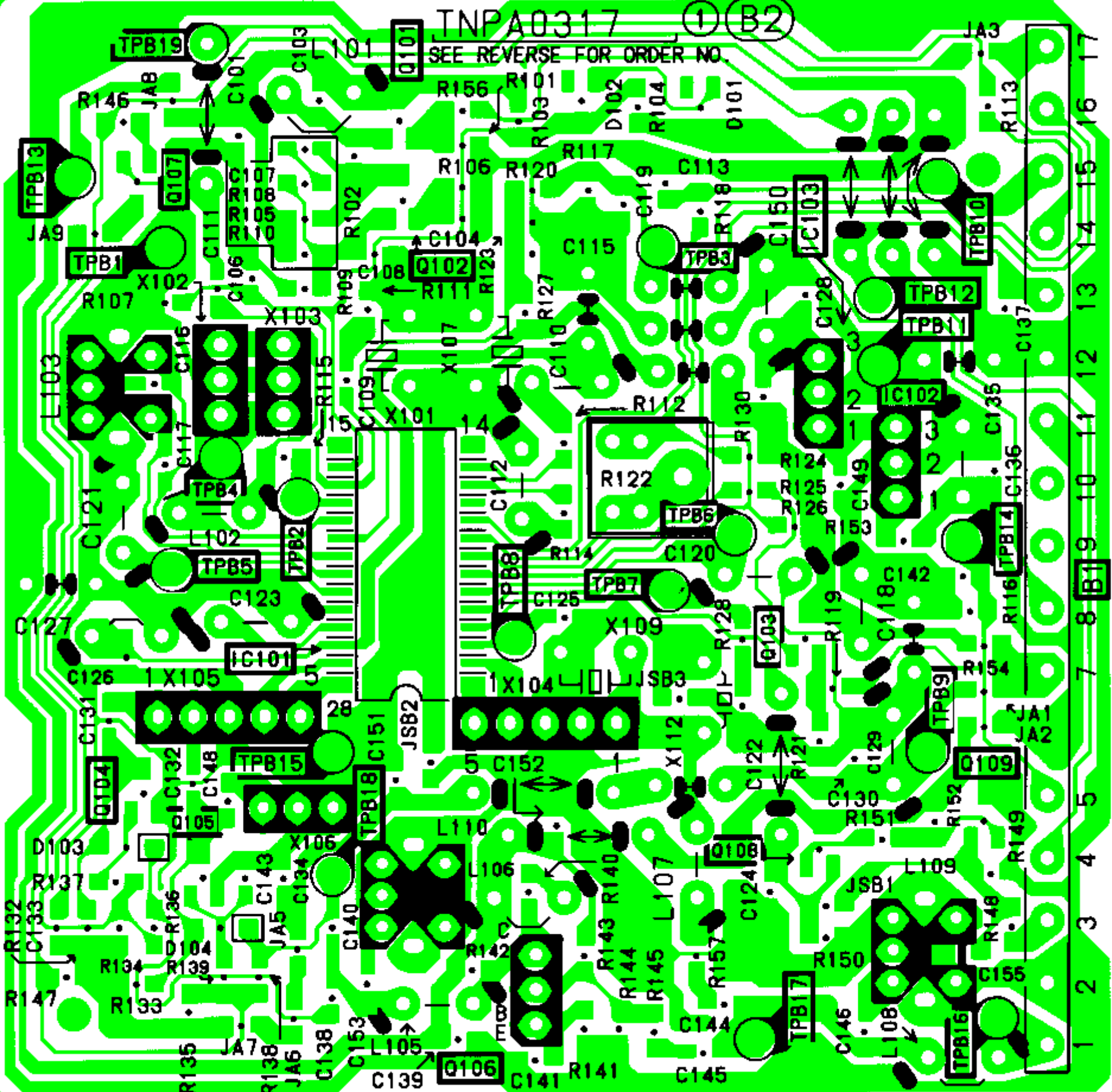
TNPA0317 ① B2
SEE REVERSE FOR ORDER NO.
TPB19
TPB13
TPB1
TPB4
TPB5
TPB2
TPB8
TPB7
TPB6
TPB3
TPB10
TPB12
TPB11
TPB14
TPB9
TPB15
TPB18
TPB17
TPB16
Q101
Q102
Q103
Q104
Q105
Q106
Q107
Q108
Q109
IC101
IC102
IC103
X101
X102
X103
X104
X105
X106
X107
X109
X112
JSB1
JSB2
JSB3
JA1
JA2
JA3
JA5
JA6
JA7
JA8
JA9
B1

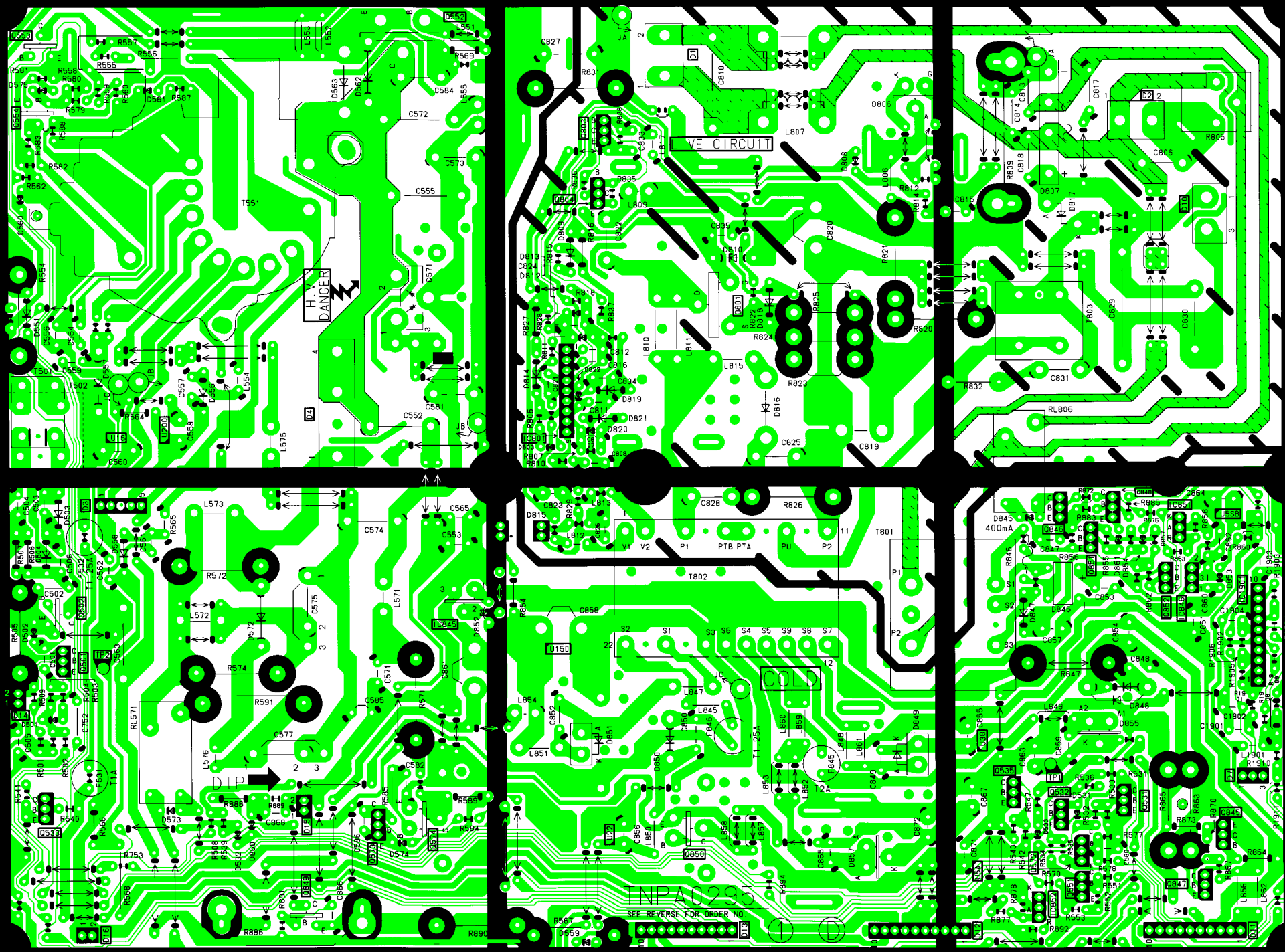
H.V.
DANGER
LIVE CIRCUIT
COLD
INPA0295
SEE REVERSE FOR ORDER NO
400mA

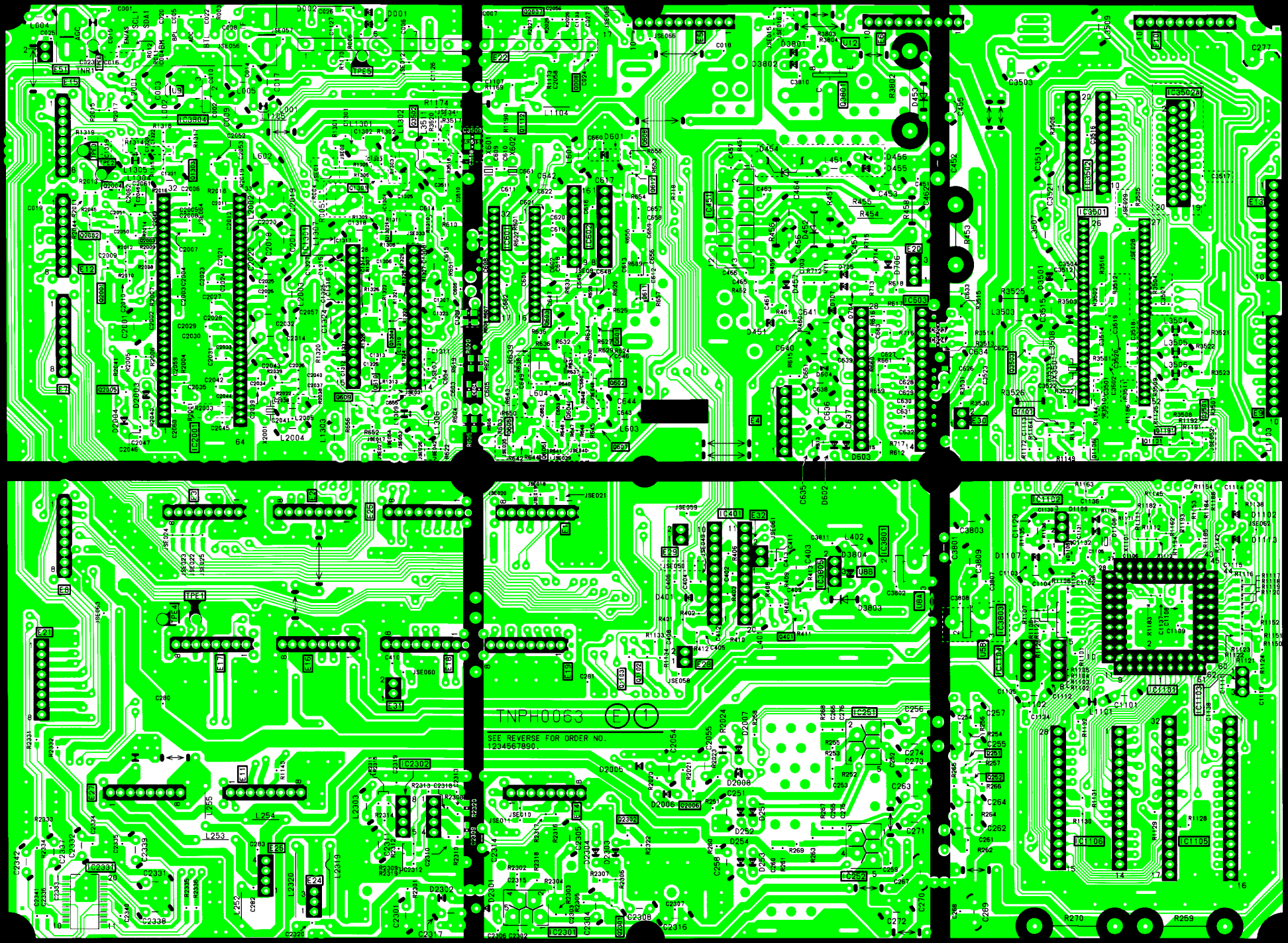
TNPH0063 (E)(1)
SEE REVERSE FOR ORDER NO.
1234567890.

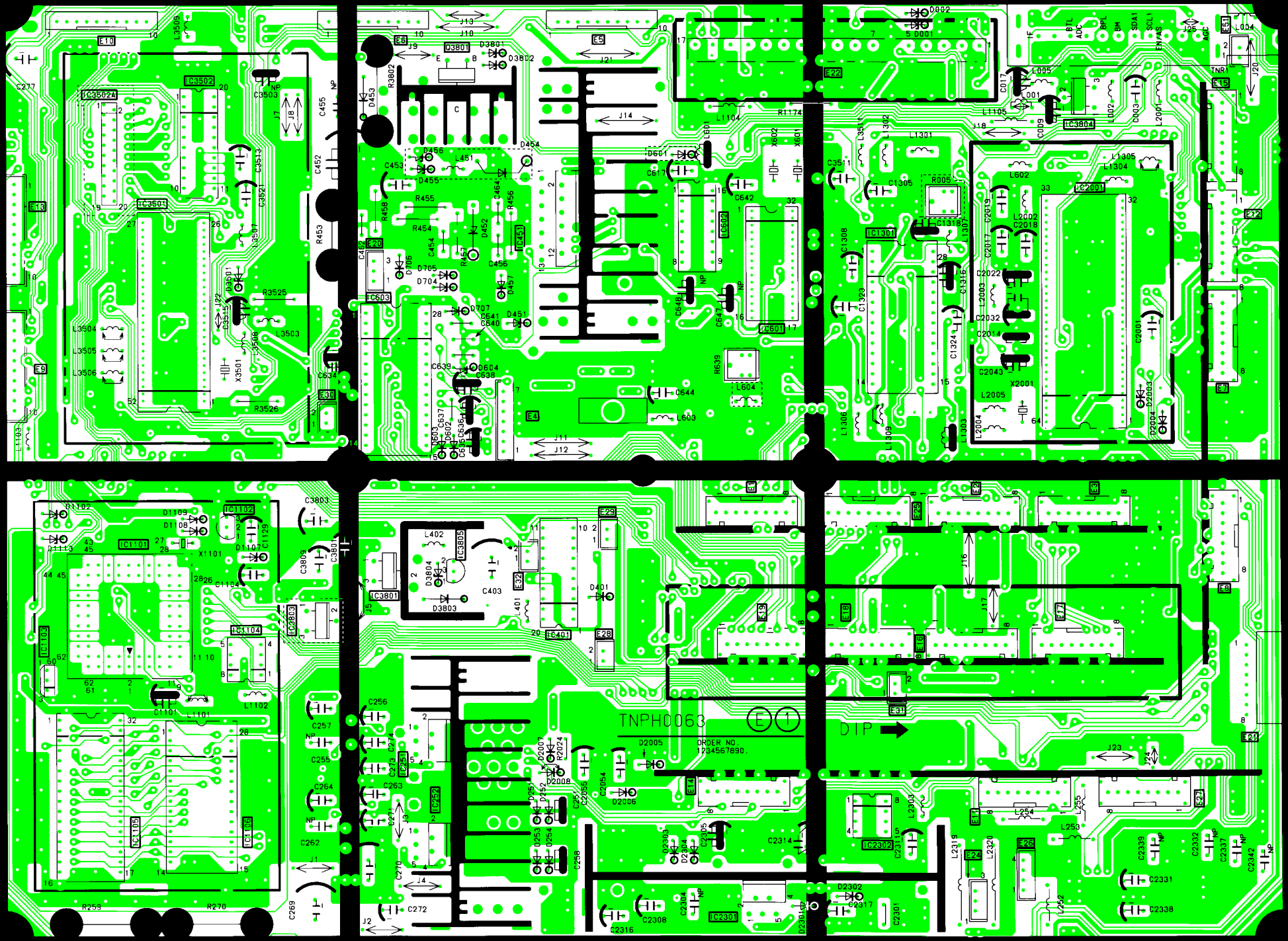
TNPH0063
ORDER NO.
1234567890.
DIP

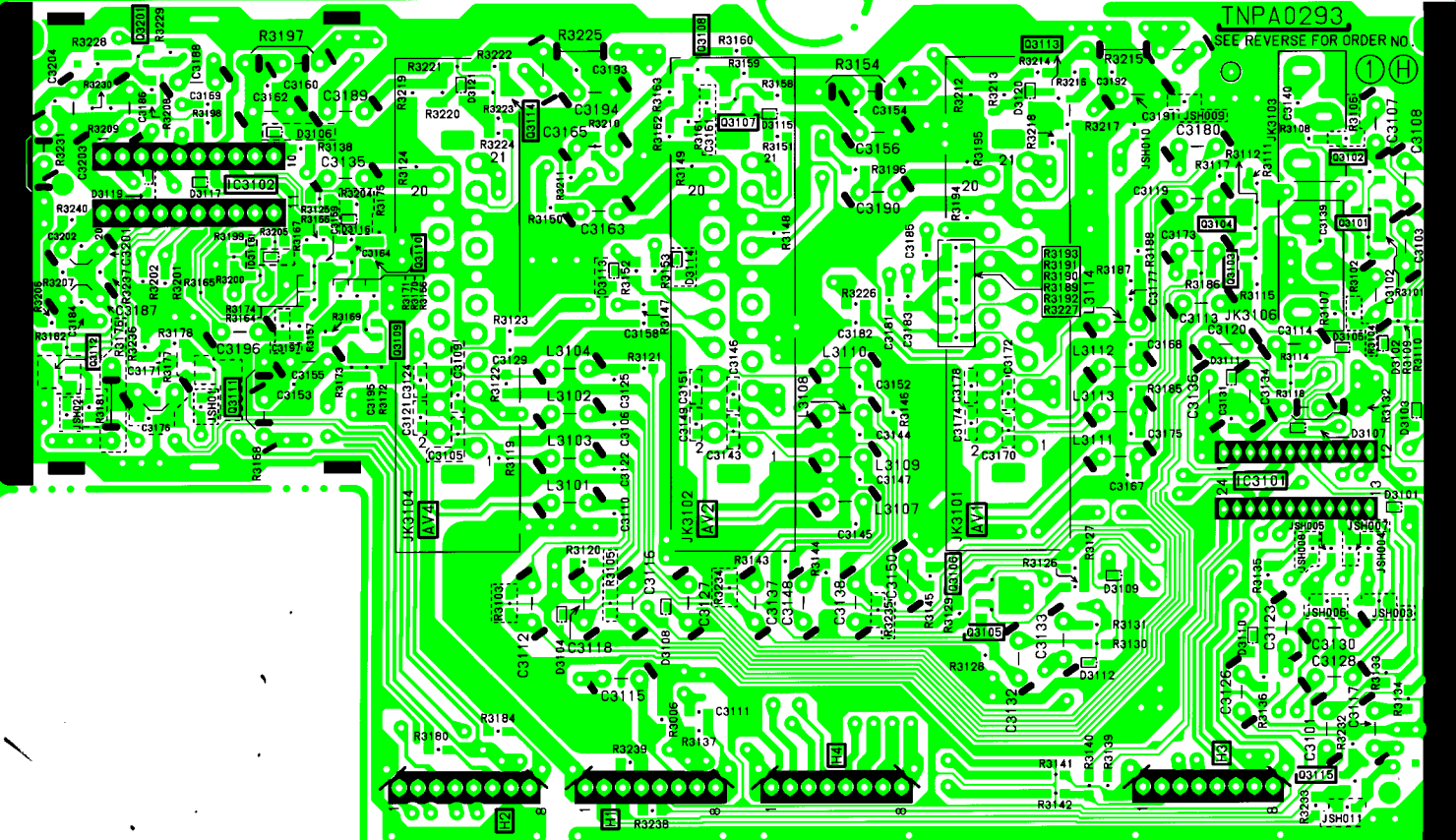
TNPA0293
SEE REVERSE FOR ORDER NO.
1
H
IC3102
IC3101
JK3104
JK3102
JK3101
JK3106
AV4
AV2
AV1
H1
H2
H3
H4

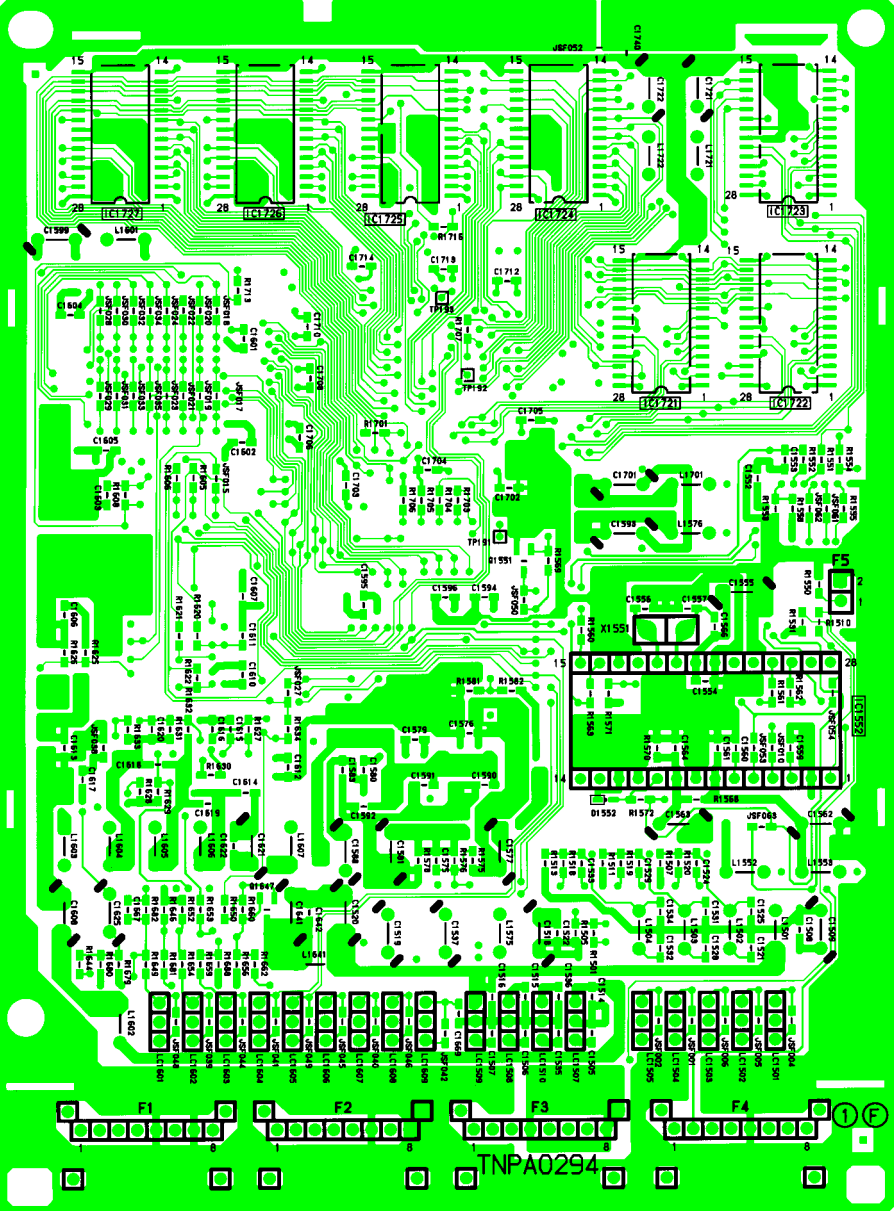
IC1727
IC1726
IC1725
IC1724
IC1723
IC1721
IC1722
IC1552
X1551
F5
F1
F2
F3
F4
TNPA0294

AV1
AV2
AV4
JK3101
JK3102
JK3104
JK3103
JK3105
R3215
R3154
R3225
R3197
C3188
C3186
C3203
C3194
C3189
C3165
C3162
C3156
C3190
C3163
C3135
C3180
C3191
C3119
C3173
C3113
C3114
C3134
C3120
C3136
C3107
C3108
C3103
C3102
R3231
IC3102
C3200
C3187
C3155
C3196
R3168
R3176
C3171
L3114
L3112
L3113
L3111
L3110
L3108
L3109
L3107
L3104
L3102
L3103
L3101
R3132
IC3101
C3150
C3138
C3148
C3137
C3127
C3116
C3118
C3112
C3115
C3130
C3128
C3123
C3126
C3117
C3101
C3133
C3132
INPA0293
ORDER NO.
DIP
H1
H2
H3
H4

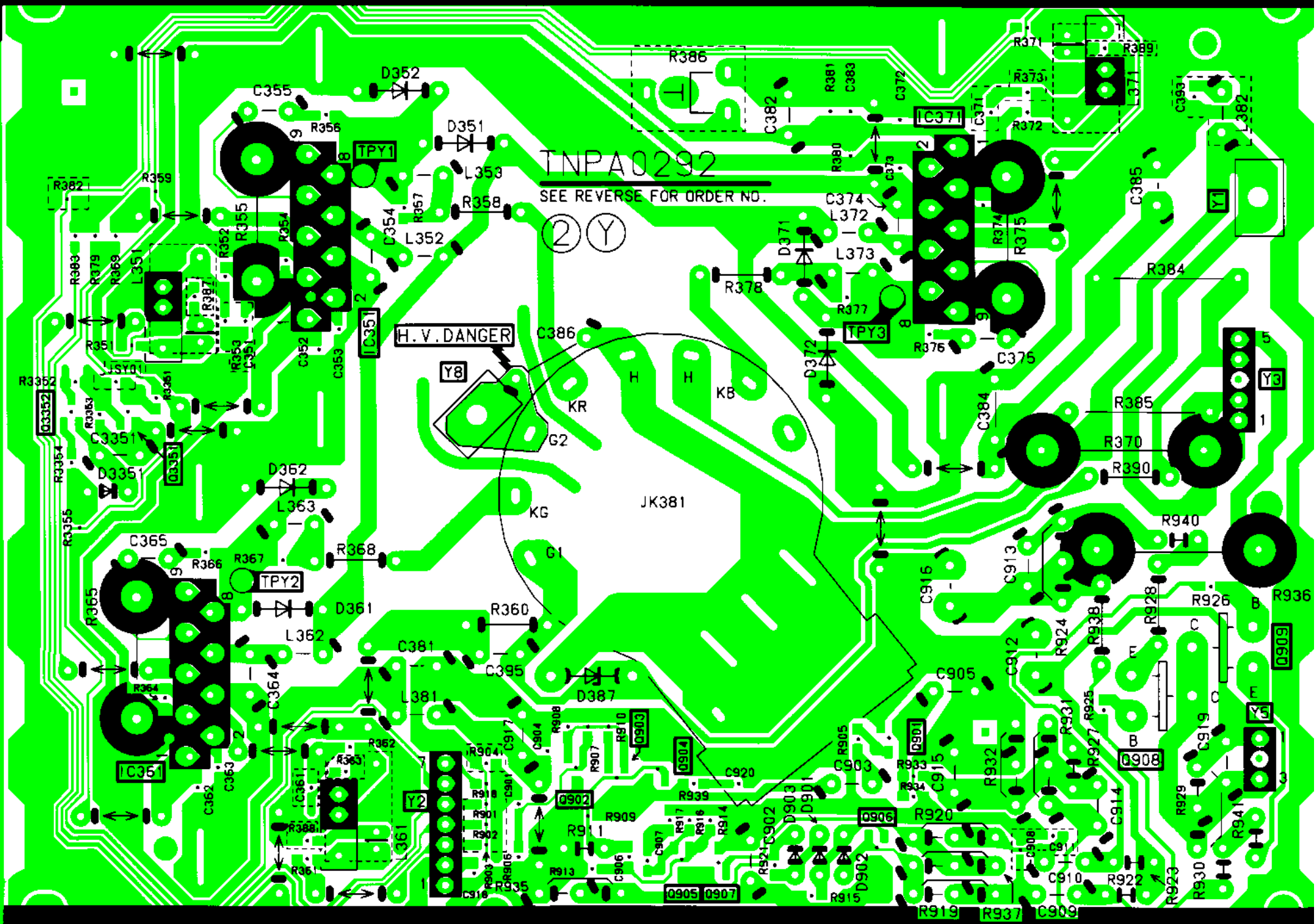
TNPA0292
SEE REVERSE FOR ORDER NO.
②Ⓨ
H.V.DANGER
JK381
R386
R381
C383
C372
C382
IC371
C371
R371
R389
R373
R372
C393
L382
C385
Y1
D352
C355
R356
TPY1
D351
L353
R358
R357
C354
L352
R355
R354
R352
R382
R359
R383
R379
R369
L351
R397
R351
JSY01
C351
R353
C352
C353
IC351
R3352
Q3352
R3353
R3351
C3351
Q3351
R3354
D3351
R3355
D362
L363
C365
R366
R367
TPY2
R368
R365
D361
L362
R364
C364
C362
C363
R360
C381
C395
L381
R362
R363
C361
R388
R361
L361
Y2
R904
R918
R901
R902
R903
R906
R935
C918
C917
C904
R908
R907
R910
Q903
Q904
Q902
R909
R911
R913
C906
C907
R917
R916
R914
R921
C902
D903
D901
D902
Q905
Q907
R915
C920
R939
R905
Q901
R933
R934
C903
C915
Q906
R920
R919
R937
C909
C908
C911
C910
R922
R923
R930
R929
R941
C914
C919
Y5
Q908
Q909
R932
R931
R927
R925
C905
C912
R924
R938
R928
R926
R936
C913
C916
R940
R390
R370
R385
Y3
C384
C375
R376
TPY3
R377
D372
R378
D371
L373
L372
C374
R380
C373
R374
R375
R384
C386
Y8
KR
G2
KG
G1
H
KB
D387
B
C
E
1
2
3
5
7
8
9